Plastic single-ended leaded (through hole) package; with cooling fin, mountable to heatsink, 1 mounting hole; 3 leads (in-line)

SOT128B

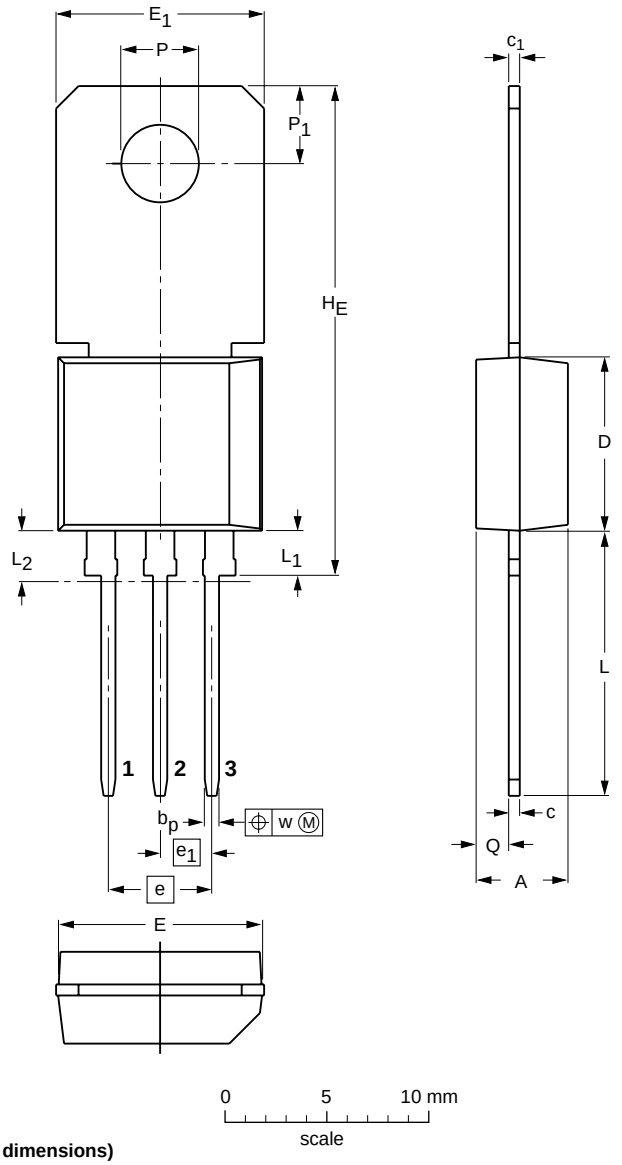

DIMENSIONS (mm are the original dimensions)

UNIT	A	b_p	c	c_1	D	E	E_1	e	e_1	H_E	L	L_1	L_2(1) max	P	P_1	Q	w
mm	4.6 4.4	0.8 0.6	0.65 0.5	0.56 0.46	8.6 8.4	10.1 9.9	10.4 10.0	5.08	2.54	24.2 23.8	13.3 12.2	2.4 2.0	2.5	3.8 3.6	3.9 3.7	1.7 1.5	0.25

Note

1. Plastic flash allowed within this zone

OUTLINE VERSION	REFERENCES				EUROPEAN PROJECTION	ISSUE DATE
	IEC	JEDEC	EIAJ			
SOT128B		TO-202AA	SC-53			~~97-02-28~~ 99-09-13