Plastic single-ended package; heatsink mounted; 1 mounting hole; 2-lead TO-220AC **SOD59**

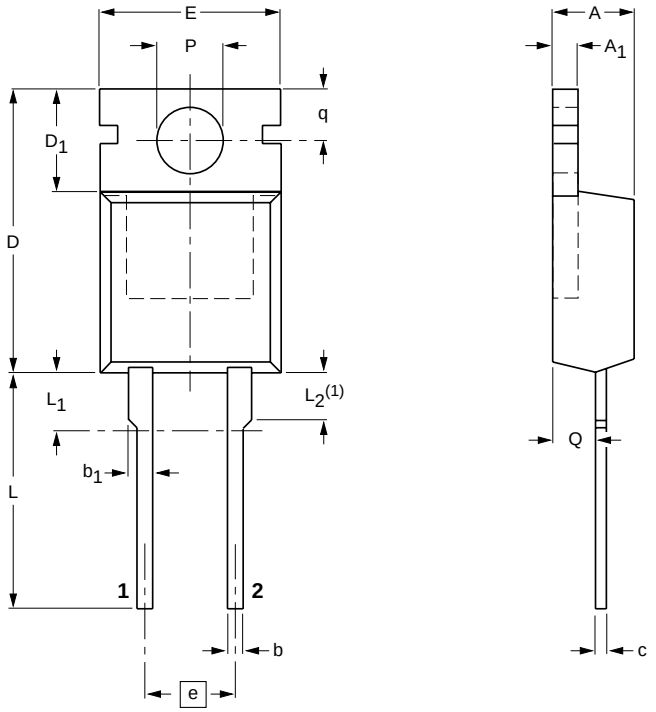

0 5 10 mm
scale

DIMENSIONS (mm are the original dimensions)

UNIT	A	A_1	b	b_1	c	D	D_1	E	e	L	L_1	L_2(1)	P	q	Q
mm	4.5 4.1	1.39 1.27	0.9 0.7	1.3 1.0	0.7 0.4	15.8 15.2	6.4 5.9	10.3 9.7	5.08	15.0 13.5	3.30 2.79	3.0	3.8 3.6	3.0 2.7	2.6 2.2

Note

1. Terminals in this zone are uncontrolled.

OUTLINE VERSION	REFERENCES				EUROPEAN PROJECTION	ISSUE DATE
	IEC	JEDEC	JEITA			
SOD59		2-lead TO-220AC				~~99-09-13~~ 05-10-25

© Koninklijke Philips Electronics N.V. 2005. All rights reserved.