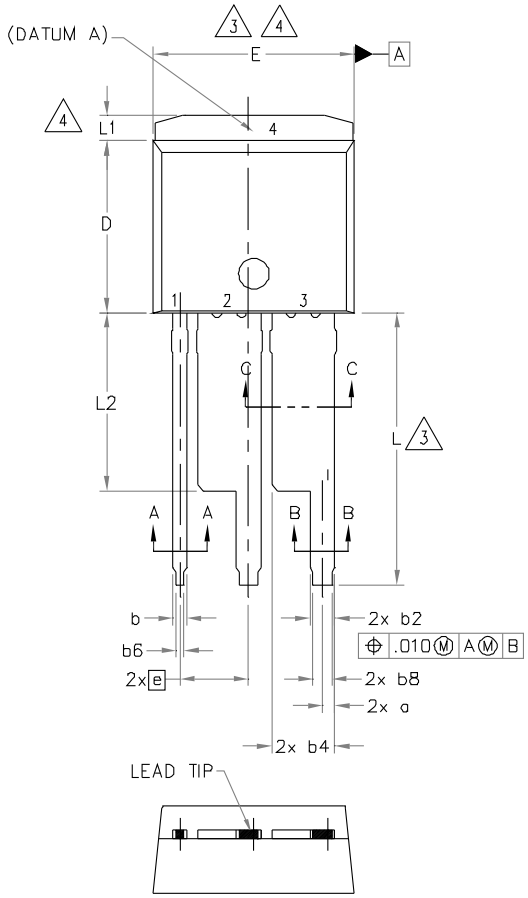

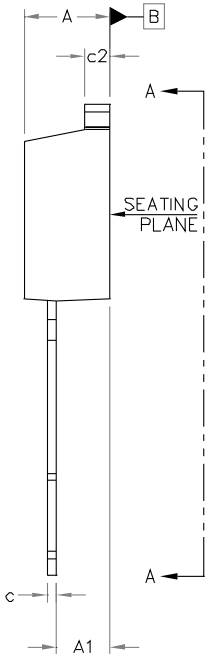

SYMBOL	DIMENSIONS				NOTES
	MILLIMETERS		INCHES		
	MIN.	MAX.	MIN.	MAX.	
A	4.06	4.83	.160	.190	
A1	2.03	3.02	.080	.119	
a	0.20	0.51	.008	.020	
b	0.51	0.91	.020	.036	5
b1	0.51	0.81	.020	.032	
b2	1.07	1.47	0.42	.058	
b3	1.07	1.37	.042	.054	5
b4	3.05	3.45	.120	.136	
b5	3.05	3.35	.120	.132	5
b6	0.25	0.61	.010	.024	
b7	0.25	0.51	.010	.020	5
b8	0.76	1.17	.030	.046	
b9	0.76	1.07	.030	.022	5
c	0.38	0.74	.015	.029	
c1	0.38	0.58	.015	.023	5
c2	1.14	1.65	.045	.065	
D	8.51	9.65	.335	.380	3
D1	6.86	7.42	.270	.292	4
E	9.65	10.67	.380	.420	3,4
E1	6.22	8.48	.245	.334	4
e	3.81 BSC		.150 BSC		
L	13.46	14.10	.530	.555	
L1	–	1.65	–	.065	4
L2	8.64	9.40	.340	.370	

NOTES:

1. DIMENSIONING AND TOLERANCING PER ASME Y14.5M–
2. DIMENSIONS ARE SHOWN IN MILLIMETERS [INCHES].
3. DIMENSION D & E DO NOT INCLUDE MOLD FLASH. M 0.127 [.005"] PER SIDE. THESE DIMENSIONS ARE ME EXTREMES OF THE PLASTIC BODY.
4. THERMAL PAD CONTOUR OPTIONAL WITHIN DIMENSION
5. DIMENSION b3, b5, b7, b9 AND c1 APPLY TO BASE
6. CONTROLLING DIMENSION: INCH.
7.– OUTLINE CONFORM TO JEDEC TO-262 EXCEPT A1(r WHERE DIMENSIONS DERIVED THE ACTUAL PACKAGE

LEAD ASSIGNMENTS

HEXFET

1.– GATE
2.– DRAIN
3.– SOURCE