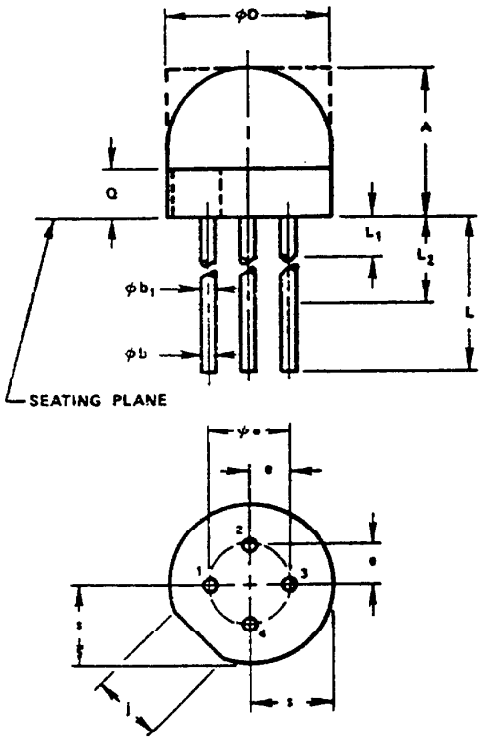

NOTES:

1. REFER TO APPLICABLE SYMBOL LIST.
2. DIMENSIONING AND TOLERANCING PER ANSI Y14.5, 1966.
3. LEAD NUMBER 4 OMITTED IN THIS OUTLINE.
4. BODY CONTOUR OPTIONAL BEYOND Q MIN., BUT MUST BE WITHIN ØD AND A.
5. $Øb_1$ APPLIES BETWEEN L_1 AND L_2. Øb APPLIES BETWEEN L_2 AND L. DIAMETER IS UNCONTROLLED IN L_1 AND BEYOND L MIN.
6. CONTROLLING DIMENSIONS: INCH.
7. MILLIMETER DIMENSIONS ARE TAKEN TO THE SAME NUMBER OF PLACES BEYOND THE DECIMAL POINT AS THE CORRESPONDING INCH DIMENSIONS. MAXIMUM CONVERSION ERROR IS NO MORE THAN .02 TIMES THE SMALLEST UNIT VALUE OF CORRESPONDING INCH DIMENSIONS.

VARIATIONS (ALL DIMENSIONS SHOWN IN MILLIMETERS)

SYMBOL	AA MIN.	AA MAX.	NOTE	AB MIN.	AB MAX.	NOTE	MIN.	MAX.	NOTE	MIN.	MAX.	NOTE
A	3.048	6.096		3.048	6.096							
Øe	2.413	2.667		2.413	2.667							
Øb	.407	.533	5	.407	.533	5						
$Øb_1$	.407	.482	5	.407	.482	5						
ØD	4.877	5.638		4.877	5.638							
e	1.143	1.397		1.143	1.397							
j	1.905	2.540		1.905	2.540							
L	12.700	15.875	5	12.700	15.875	5						
L_1	--	1.270	5	--	1.270	5						
L_2	6.350	--	5	6.350	--	5						
Q	1.524	--	4	1.524	--	4						
s	2.032	2.921		2.032	2.921							
NOTE	1,2,6,7			1,2,3,6,7								
REF.												
ISSUE	A June 1974			A June 1974								

JEDEC SOLID STATE PRODUCT OUTLINES	TITLE HEADER FAMILY (2.540 PIN CIRCLE)	ISSUE	DATE	TO-223AA-AB
		A	June 1974	

Power Electronics Specialists

Downloaded by R. Legg (legg@magma.ca) on Apr 21, 2018, 2:51 pm PDT

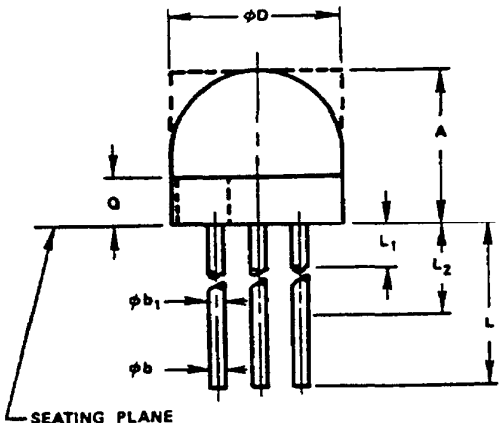

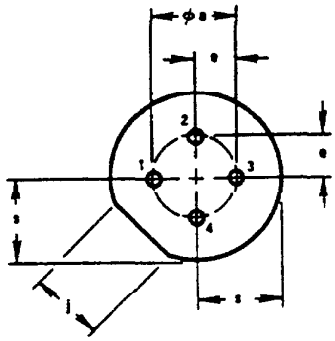

NOTES:

1. REFER TO APPLICABLE SYMBOL LIST.
2. DIMENSIONING AND TOLERANCING PER ANSI Y14.5, 1966.
3. LEAD NUMBER 4 OMITTED IN THIS OUTLINE.
4. BODY CONTOUR OPTIONAL BEYOND Q MIN., BUT MUST BE WITHIN ϕD AND A.
5. ϕb_1 APPLIES BETWEEN L_1 AND L. ϕb APPLIES BETWEEN L_2 AND L. DIAMETER IS UNCONTROLLED IN L_1 AND BEYOND L MIN.
6. CONTROLLING DIMENSIONS: INCH.

VARIATIONS (ALL DIMENSIONS SHOWN IN INCHES)

SYMBOL	AA MIN.	AA MAX.	NOTE	AB MIN.	AB MAX.	NOTE	MIN.	MAX.	NOTE	MIN.	MAX.	NOTE
A	.120	.240		.120	.240							
ϕa	.095	.105		.095	.105							
ϕb	.016	.021	5	.016	.021	5						
ϕb_1	.016	.019	5	.016	.019	5						
ϕD	.192	.222		.192	.222							
e	.045	.055		.045	.055							
j	.075	.100		.075	.100							
L	.500	.625	5	.500	.625	5						
L_1	--	.050	5	--	.060	5						
L_2	.250	--	5	.250	--	5						
Q	.060	--	4	.060	--	4						
s	.080	.115		.080	.115							
NOTE	1.2.6			1,2,3,6								
REF.												
ISSUE	A June 1974			A June 1974								

JEDEC SOLID STATE PRODUCT OUTLINES	TITLE HEADER FAMILY (.100 PIN CIRCLE)	ISSUE A	DATE June 1974	TO-223AA-AB

Power Electronics Specialists

Downloaded by R. Legg (legg@magma.ca) on Apr 21, 2018, 2:51 pm PDT