Plastic single-ended package; heatsink mounted; 1 mounting hole; 5-lead TO-220 **SOT263**

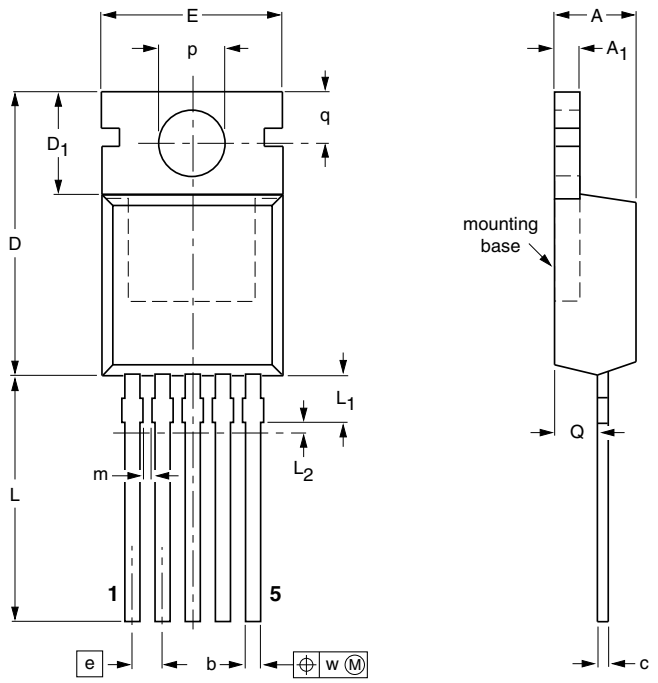

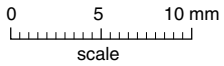

DIMENSIONS (mm are the original dimensions)

UNIT	A	A_1	b	c	D	D_1	E	e	L	L_1 (1)	L_2 (2)	m	p	q	Q	w
mm	4.5 4.1	1.39 1.27	0.9 0.7	0.7 0.4	15.8 15.2	6.4 5.9	10.3 9.7	1.7	15.0 13.5	2.4 1.6	0.5	0.8 0.6	3.8 3.6	3.0 2.7	2.6 2.2	0.4

Notes

1. Terminal dimensions are uncontrolled in this zone.
2. Positional accuracy of the terminals is controlled in this zone.

OUTLINE VERSION	REFERENCES				EUROPEAN PROJECTION	ISSUE DATE
	IEC	JEDEC	JEITA			
SOT263		5-lead TO-220				~~97-06-11~~ 06-02-14

© 2008 NXP B.V.
All rights reserved. Reproduction in whole or in part is prohibited without prior consent of the copyright owner. The information presented in this document does not form part of any quotation or contract, is believed to be accurate and reliable and may be changed without notice. No liability will be accepted by the publisher for any consequence of it's use. Publication thereof does not convey or imply any license under patent- or other industrial or intellectual property rights.

Printed in the Netherlands