Plastic single-ended package; 2-lead low-profile TO-220 **SOD95**

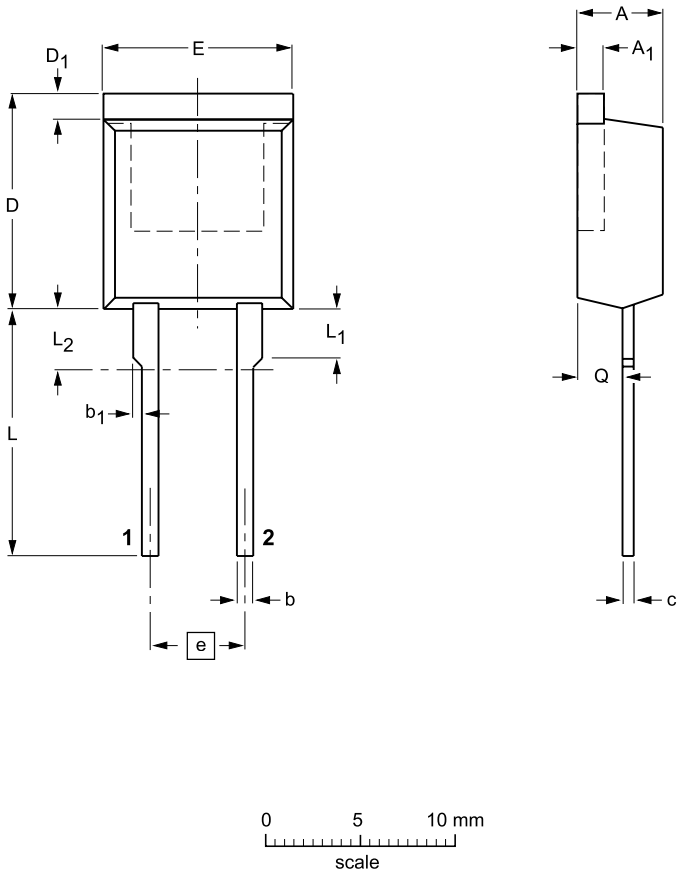

DIMENSIONS (mm are the original dimensions)

UNIT	A	A_1	b	b_1	c	D	D_1	E	e	L	L_1	L_2 (1) max	Q
mm	4.5 4.1	1.39 1.27	0.9 0.7	1.3 1.0	0.7 0.4	11.0 10.0	1.5 1.1	10.3 9.7	5.08	15.0 13.5	3.30 2.79	3.0	2.6 2.2

Note

1. Terminals in this zone are not tinned.

OUTLINE VERSION	REFERENCES				EUROPEAN PROJECTION	ISSUE DATE
	IEC	JEDEC	EIAJ			
SOD95		low-profile 2-lead TO-220				97-06-11