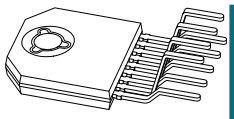

SOT523-1

plastic DIL-bent-SIL power package; 9 leads (lead length 12/11 mm); exposed die pad

8 February 2016 Package information

1. Package summary

Terminal position code	Z (zig-zag)
Package type descriptive code	DBS9P
Package type industry code	DBS9P
Package style descriptive code	DBS (DIL-bent-SIL)
Package style suffix code	P (power)
Package body material type	P (plastic)
Mounting method type	T (through-hole mount)
Issue date	12-3-2003

Table 1. Package summary

Symbol	Parameter		Min	Typ	Nom	Max	Unit
D	package length		12.8	-	13	13.2	mm
E	package width		14.3	-	14.5	14.7	mm
A_2	package height		2.3	-	2.5	2.7	mm
n_2	actual quantity of termination		-	-	9	-	

2. Package outline

DBS9P: plastic DIL-bent-SIL power package; 9 leads (lead length 12/11 mm); exposed die pad **SOT523-1**

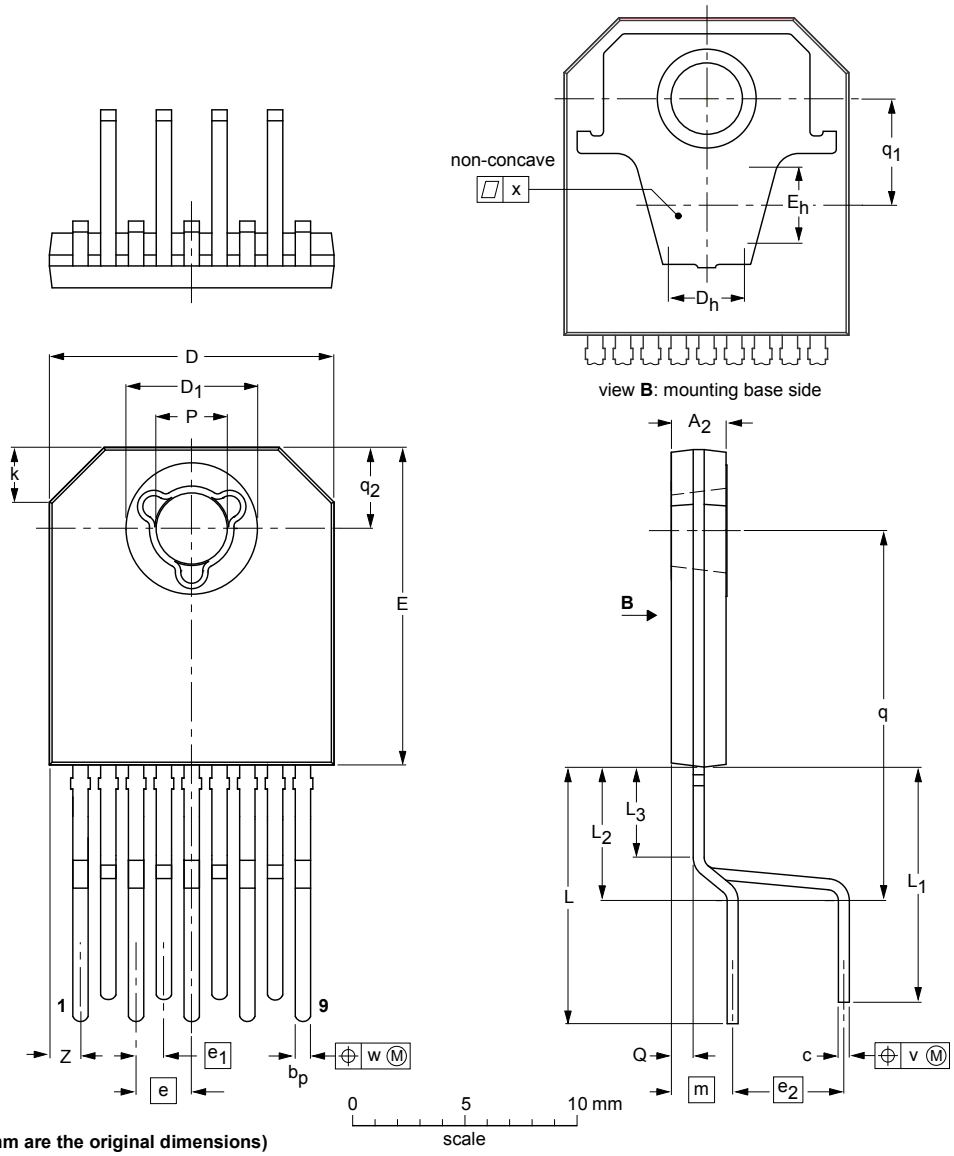

DIMENSIONS (mm are the original dimensions)

UNIT	A_2 (2)	b_p	c	D (1)	D_1 (2)	D_h	E (1)	E_h	e	e_1	e_2	k	L	L_1	L_2	L_3	m	P	Q	q	q_1	q_2	v	w	x	Z (1)
mm	2.7 2.3	0.80 0.65	0.58 0.48	13.2 12.8	6.2 5.8	3.5	14.7 14.3	3.5	2.54	1.27	5.08	3 2	12.4 11.0	11.4 10.0	6.7 5.5	4.5 3.7	2.8	3.4 3.1	1.15 0.85	17.5 16.3	4.85	3.8 3.6	0.8	0.3	0.02	1.65 1.10

Notes

1. Plastic or metal protrusions of 0.25 mm maximum per side are not included.
2. Plastic surface within circle area D_1 may protrude 0.04 mm maximum.

OUTLINE VERSION	REFERENCES				EUROPEAN PROJECTION	ISSUE DATE
	IEC	JEDEC	JEITA			
SOT523-1						~~00-07-03~~ 03-03-12

Fig. 1. Package outline DBS9P (SOT523-1)

All information provided in this document is subject to legal disclaimers.

© NXP Semiconductors N.V. 2016. All rights reserved

3. Legal information

Disclaimers

Limited warranty and liability — Information in this document is believed to be accurate and reliable. However, NXP Semiconductors does not give any representations or warranties, expressed or implied, as to the accuracy or completeness of such information and shall have no liability for the consequences of use of such information. NXP Semiconductors takes no responsibility for the content in this document if provided by an information source outside of NXP Semiconductors.

In no event shall NXP Semiconductors be liable for any indirect, incidental, punitive, special or consequential damages (including - without limitation - lost profits, lost savings, business interruption, costs related to the removal or replacement of any products or rework charges) whether or not such damages are based on tort (including negligence), warranty, breach of contract or any other legal theory.

Notwithstanding any damages that customer might incur for any reason whatsoever, NXP Semiconductors' aggregate and cumulative liability towards customer for the products described herein shall be limited in accordance with the *Terms and conditions of commercial sale* of NXP Semiconductors.

Right to make changes — NXP Semiconductors reserves the right to make changes to information published in this document, including without limitation specifications and product descriptions, at any time and without notice. This document supersedes and replaces all information supplied prior to the publication hereof.

All information provided in this document is subject to legal disclaimers.

© NXP Semiconductors N.V. 2016. All rights reserved

4. Contents

1. Package summary..... 1
2. Package outline..... 2
3. Legal information..... 3

© NXP Semiconductors N.V. 2016. All rights reserved

For more information, please visit: http://www.nxp.com
For sales office addresses, please send an email to: salesaddresses@nxp.com
Date of release: 8 February 2016