TO-226AE Package Dimensions

FAIRCHILD SEMICONDUCTOR™

TO-226AE (FS PKG Code 95, 99)

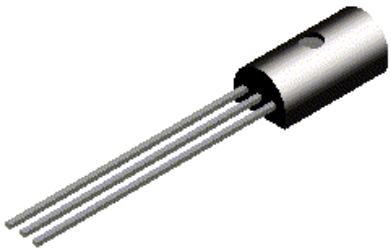

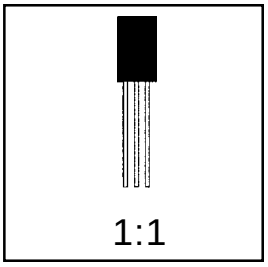

Scale 1:1 on letter size paper

Dimensions shown below are in:
inches [millimeters]

Part Weight per unit (gram): 0.300

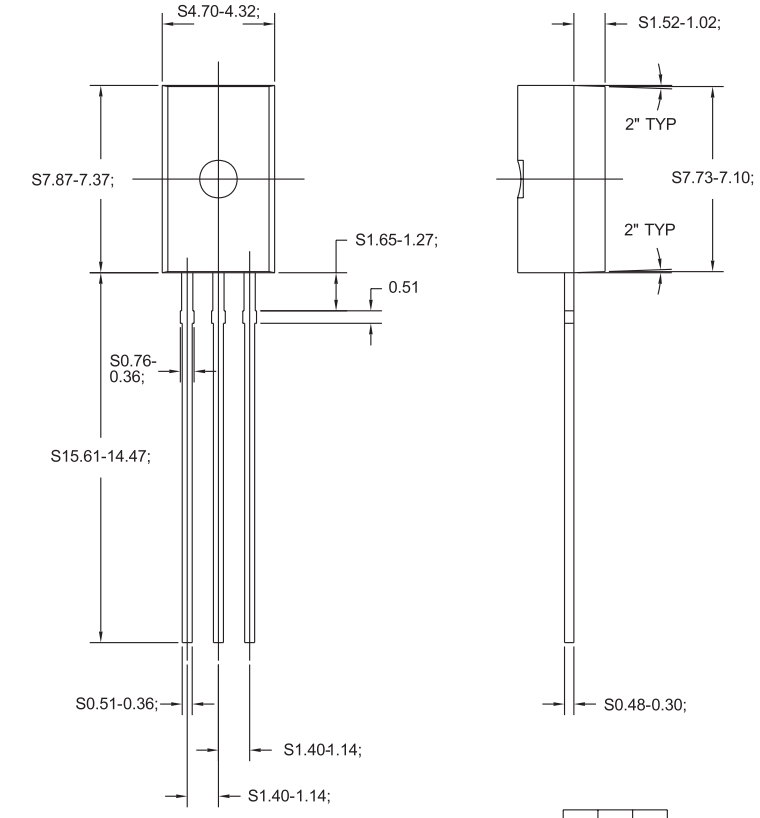

PIN	99	95
1	E	E
2	B	C
3	C	B

TO-226AE (95,99)

For leadformed option ordering,
refer to Tape & Reel data information.

©2000 Fairchild Semiconductor International