Plastic single-ended leaded (through hole) package; mountable to heatsink, 1 mounting hole; 3 leads SOT32

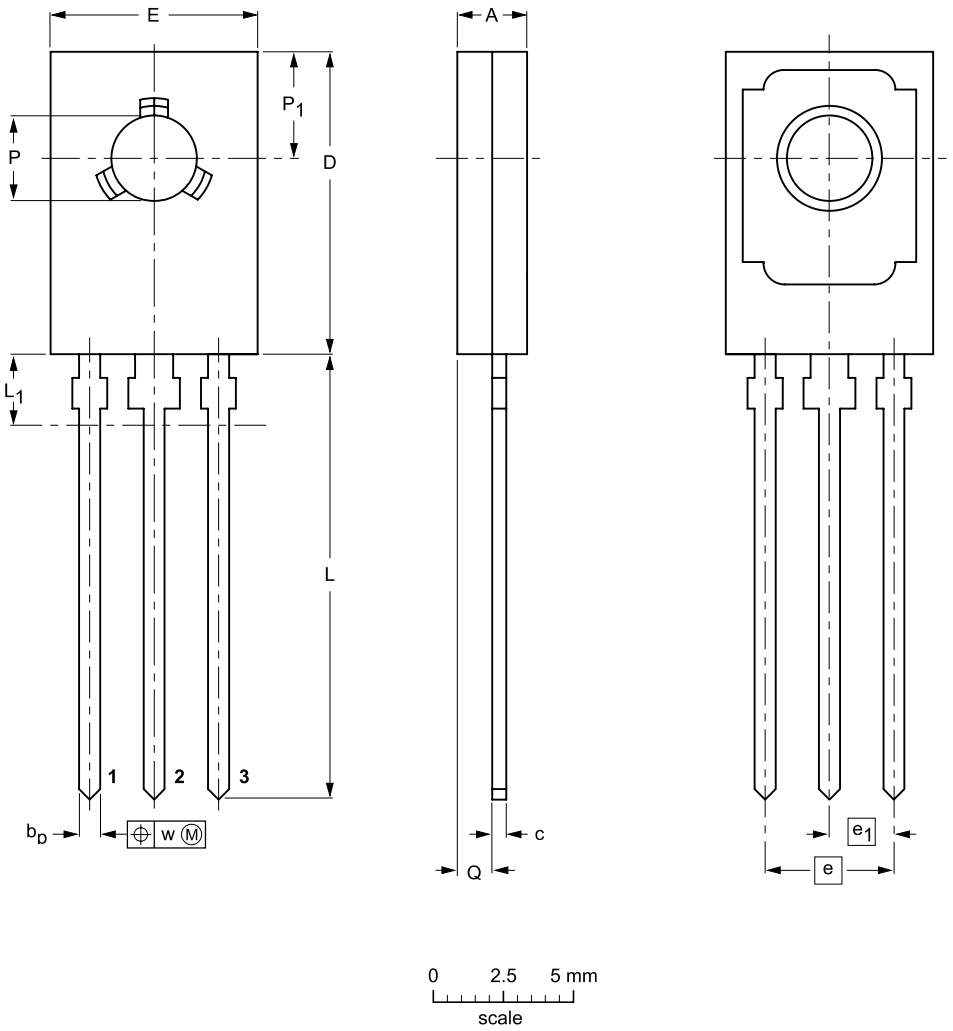

DIMENSIONS (mm are the original dimensions)

UNIT	A	b_p	c	D	E	e	e_1	L	L_1(1) max	Q	P	P_1	w
mm	2.7 2.3	0.88 0.65	0.60 0.45	11.1 10.5	7.8 7.2	4.58	2.29	16.5 15.3	2.54	1.5 0.9	3.2 3.0	3.9 3.6	0.254

Note

1. Terminal dimensions within this zone are uncontrolled to allow for flow of plastic and terminal irregularities.

OUTLINE VERSION	REFERENCES				EUROPEAN PROJECTION	ISSUE DATE
	IEC	JEDEC	EIAJ			
SOT32		TO-126				97-03-04