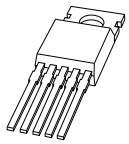

SOT263

plastic single-ended package; heatsink mounted; 1 mounting hole; 5-lead TO-220

8 February 2016 | Package information

1. Package summary

Terminal position code	S (single)
Package type descriptive code	TO-220-5
Package type industry code	TO-220-5
Package style descriptive code	SFM (single-ended flange mount)
Package style suffix code	NA (not applicable)
Package body material type	P (plastic)
JEDEC package outline code	5-lead TO-220
Mounting method type	H (heatsink mount)
Issue date	14-2-2006

Table 1. Package summary

Symbol	Parameter		Min	Typ	Nom	Max	Unit
D	package length		15.2	-	15.5	15.8	mm
E	package width		9.7	-	10	10.3	mm
A	seated height		4.1	-	4.3	4.5	mm
e	nominal pitch		-	-	1.7	-	mm
n_2	actual quantity of termination		-	-	5	-	

2. Package outline

Plastic single-ended package; heatsink mounted; 1 mounting hole; 5-lead TO-220 **SOT263**

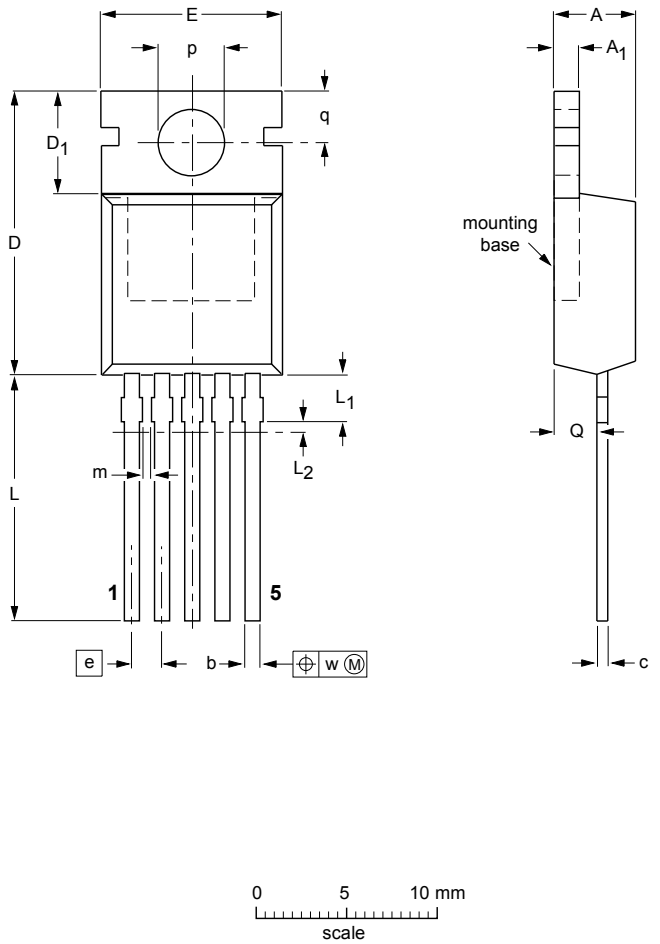

DIMENSIONS (mm are the original dimensions)

UNIT	A	A_1	b	c	D	D_1	E	e	L	L_1 (1)	L_2 (2)	m	p	q	Q	w
mm	4.5 4.1	1.39 1.27	0.9 0.7	0.7 0.4	15.8 15.2	6.4 5.9	10.3 9.7	1.7	15.0 13.5	2.4 1.6	0.5	0.8 0.6	3.8 3.6	3.0 2.7	2.6 2.2	0.4

Notes

1. Terminal dimensions are uncontrolled in this zone.
2. Positional accuracy of the terminals is controlled in this zone.

OUTLINE VERSION	REFERENCES				EUROPEAN PROJECTION	ISSUE DATE
	IEC	JEDEC	JEITA			
SOT263		5-lead TO-220				~~97-06-11~~ 06-02-14

Fig. 1. Package outline TO-220-5 (SOT263)

All information provided in this document is subject to legal disclaimers.

© NXP Semiconductors N.V. 2016. All rights reserved

3. Legal information

Disclaimers

Limited warranty and liability — Information in this document is believed to be accurate and reliable. However, NXP Semiconductors does not give any representations or warranties, expressed or implied, as to the accuracy or completeness of such information and shall have no liability for the consequences of use of such information. NXP Semiconductors takes no responsibility for the content in this document if provided by an information source outside of NXP Semiconductors.

In no event shall NXP Semiconductors be liable for any indirect, incidental, punitive, special or consequential damages (including - without limitation - lost profits, lost savings, business interruption, costs related to the removal or replacement of any products or rework charges) whether or not such damages are based on tort (including negligence), warranty, breach of contract or any other legal theory.

Notwithstanding any damages that customer might incur for any reason whatsoever, NXP Semiconductors' aggregate and cumulative liability towards customer for the products described herein shall be limited in accordance with the *Terms and conditions of commercial sale* of NXP Semiconductors.

Right to make changes — NXP Semiconductors reserves the right to make changes to information published in this document, including without limitation specifications and product descriptions, at any time and without notice. This document supersedes and replaces all information supplied prior to the publication hereof.

All information provided in this document is subject to legal disclaimers.

© NXP Semiconductors N.V. 2016. All rights reserved

4. Contents

1. Package summary..... 1
2. Package outline..... 2
3. Legal information..... 3

© NXP Semiconductors N.V. 2016. All rights reserved

For more information, please visit: http://www.nxp.com
For sales office addresses, please send an email to: salesaddresses@nxp.com
Date of release: 8 February 2016