National Semiconductor

May 1999

Transistor Outline (TO-202)

3 Lead Molded TO-202
NS Package Number P03A

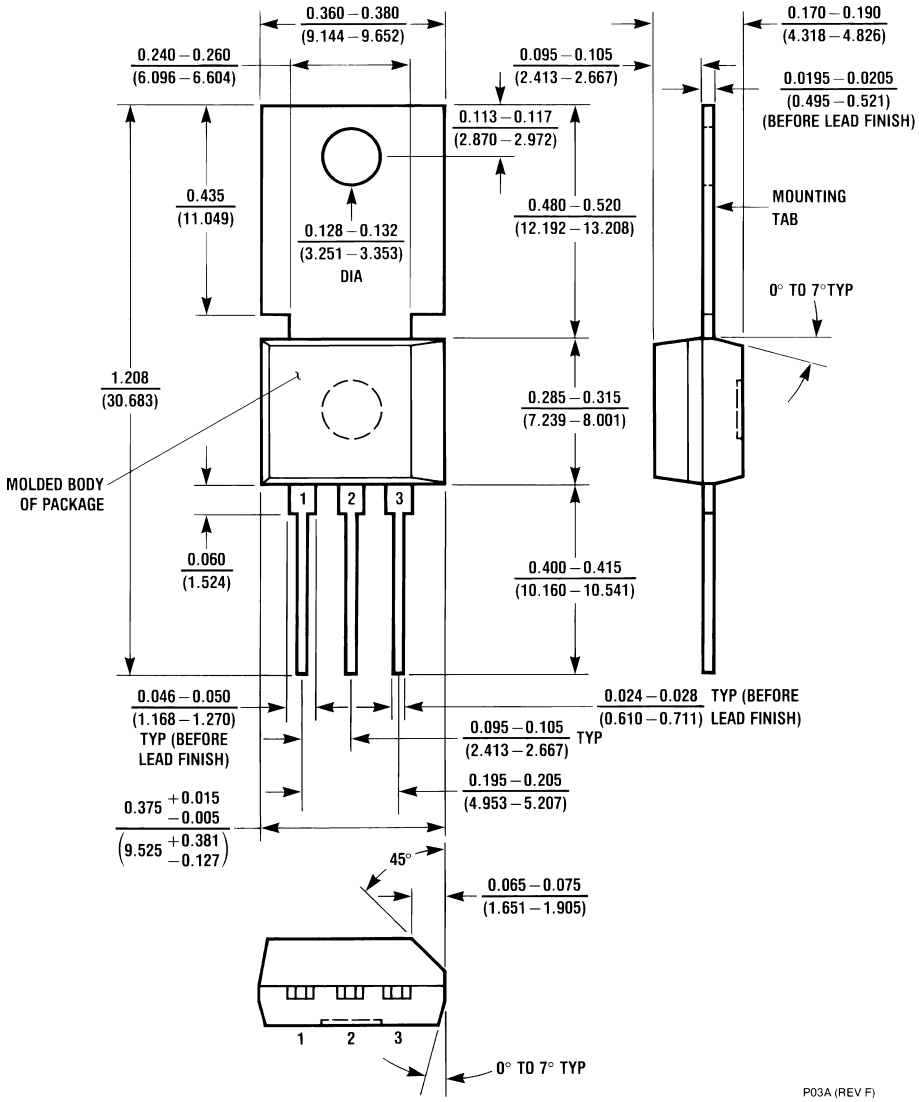

© 2000 National Semiconductor Corporation

3 Lead Molded TO-202
NS Package Number P03B

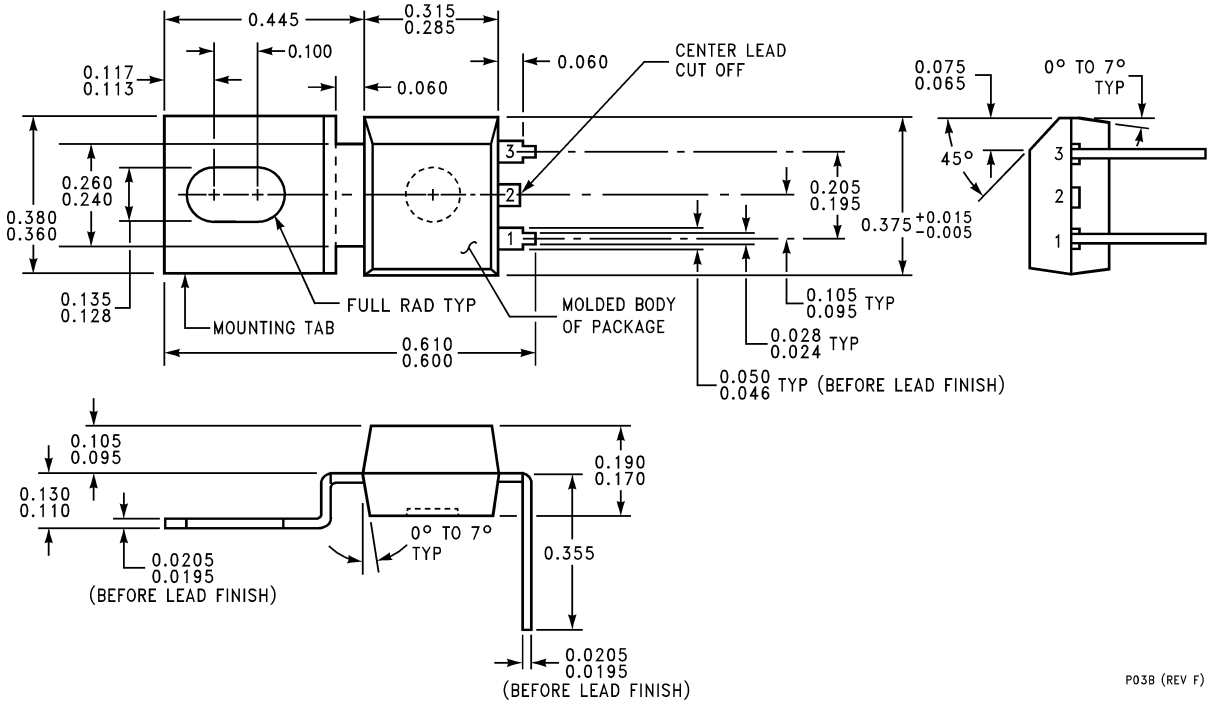

3 Lead Molded TO-202
NS Package Number P03C

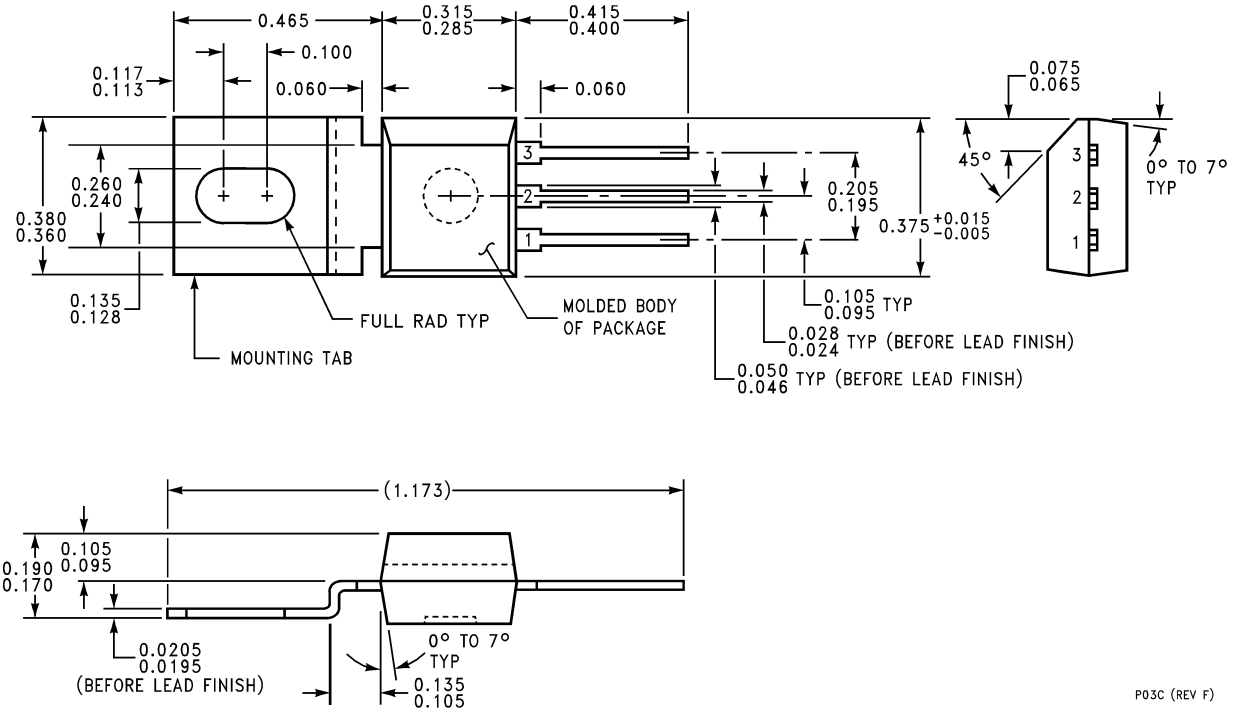

3 Lead Molded TO-202
NS Package Number P03D

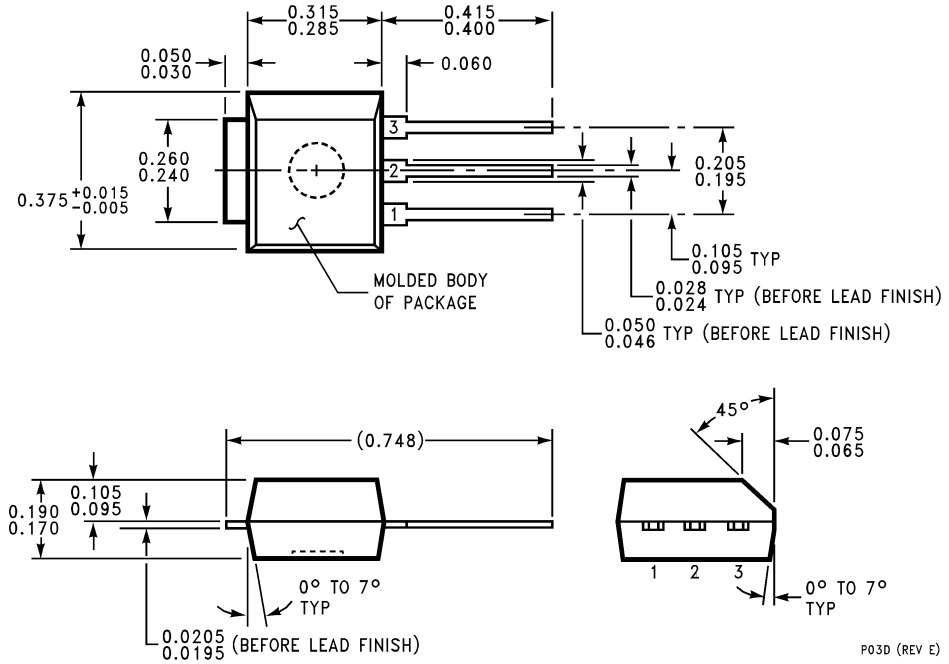

3 Lead Molded TO-202
NS Package Number P03E

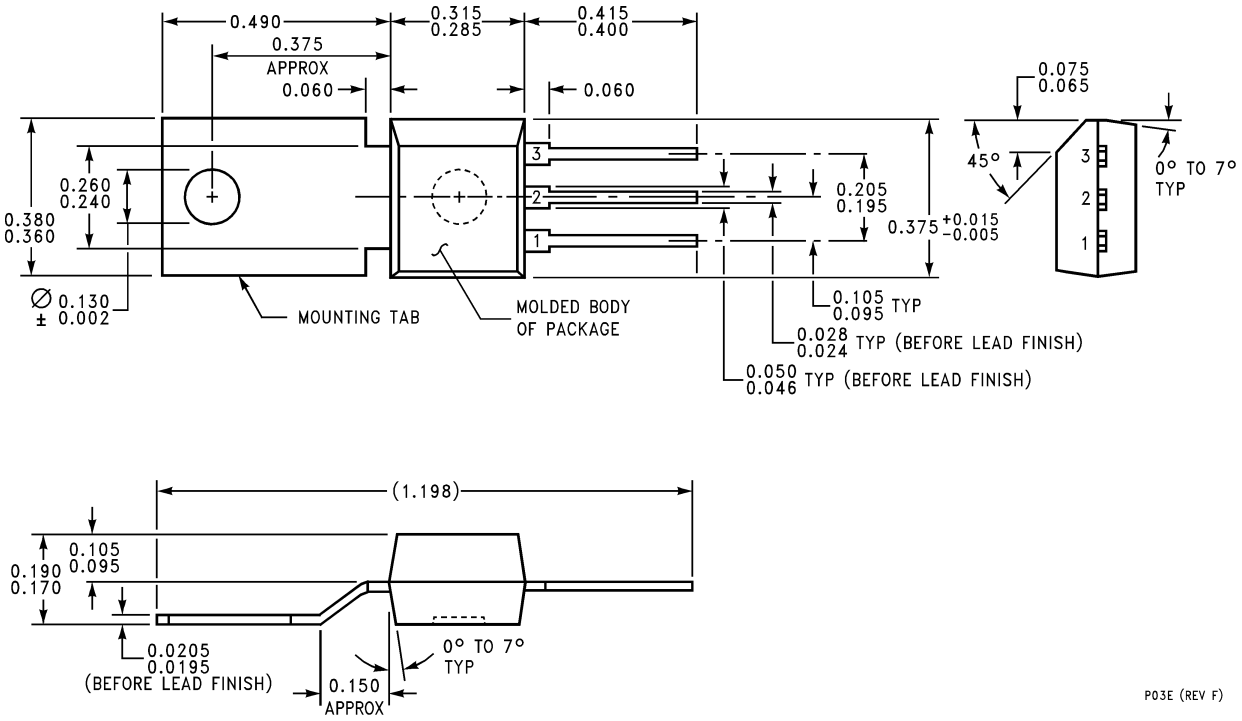

3 Lead Molded TO-202
NS Package Number P03F

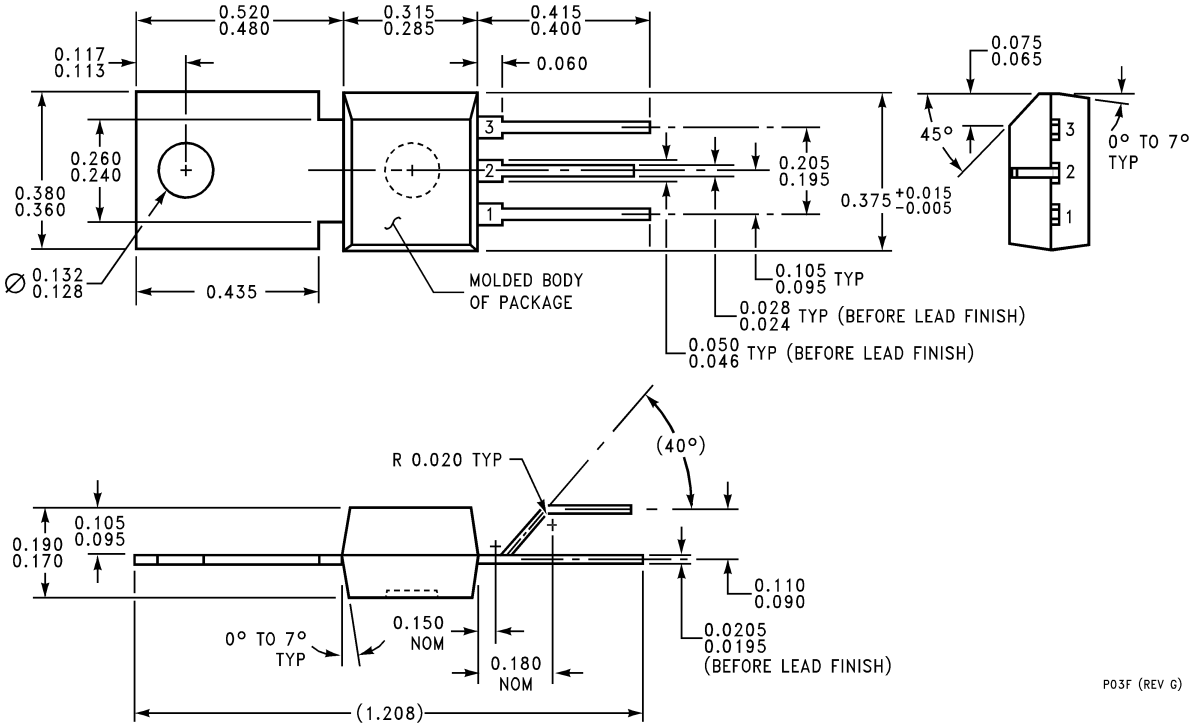

3 Lead Molded TO-202
NS Package Number P03G

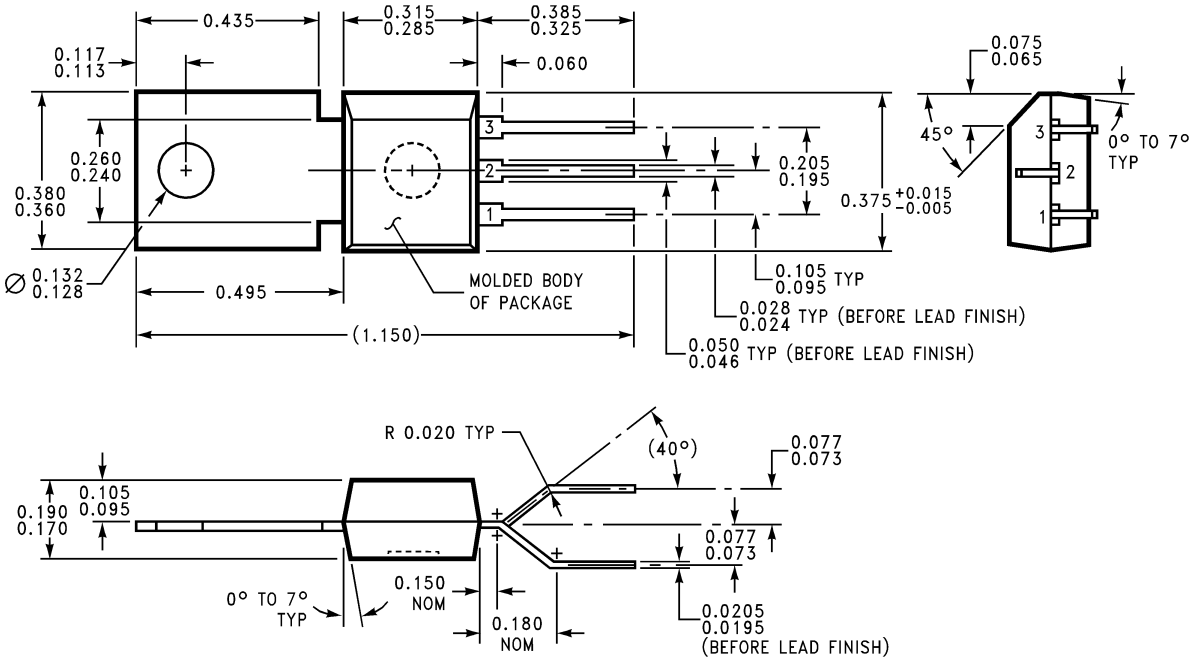

P03G-2	LEAD No. 2	LEAD No. 3	LEAD No. 1
P03G-1	LEAD No. 3	LEAD No. 1	LEAD No. 2
OPTIONS	COLLECTOR	EMITTER	BASE

P03G (REV E)

3 Lead Molded TO-202
NS Package Number P03H

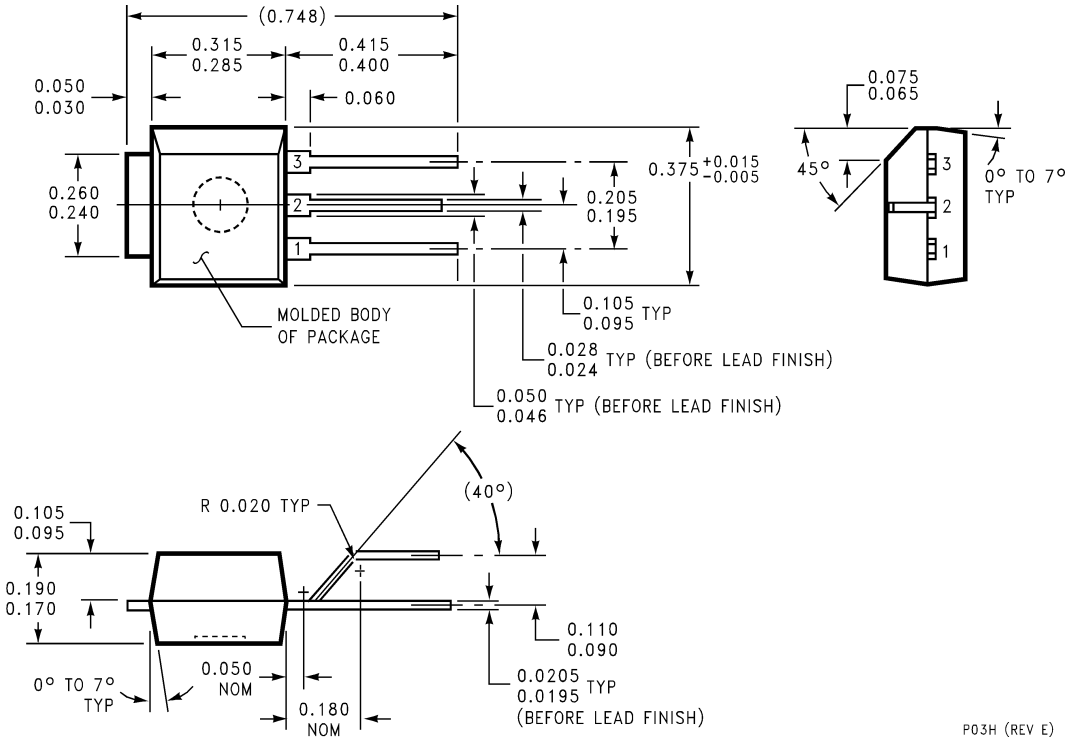

3 Lead Molded TO-202
NS Package Number P03J

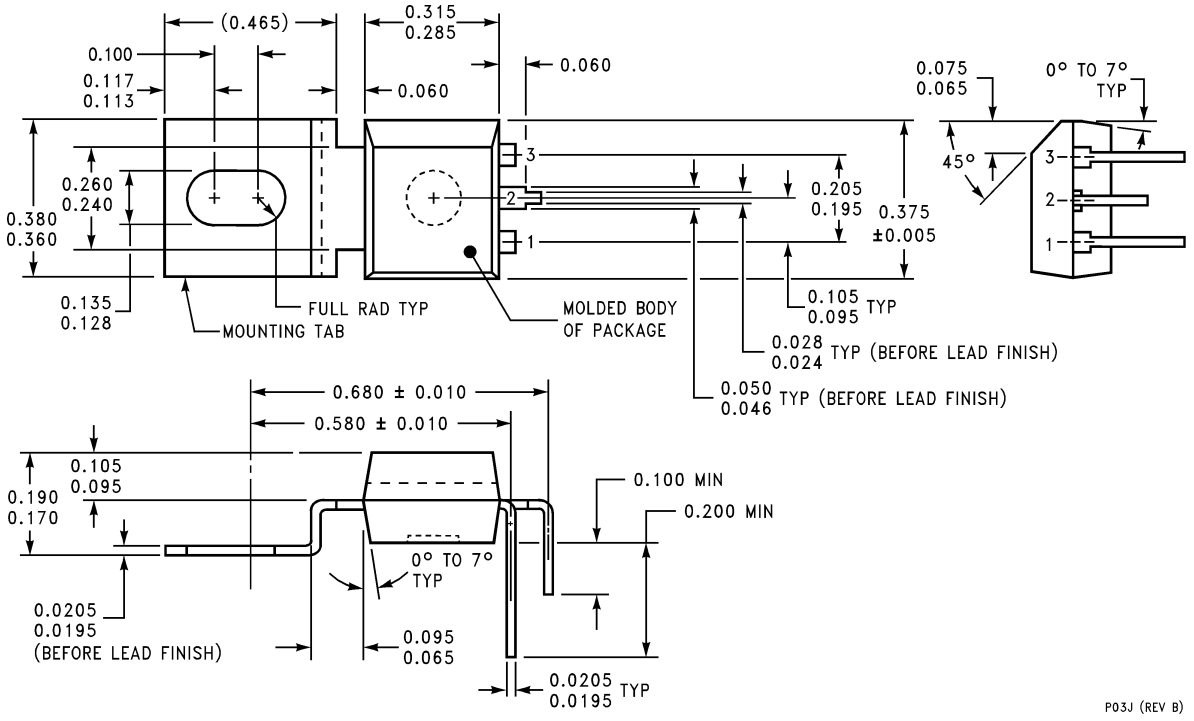

4 Lead Molded TO-202
NS Package Number P04A

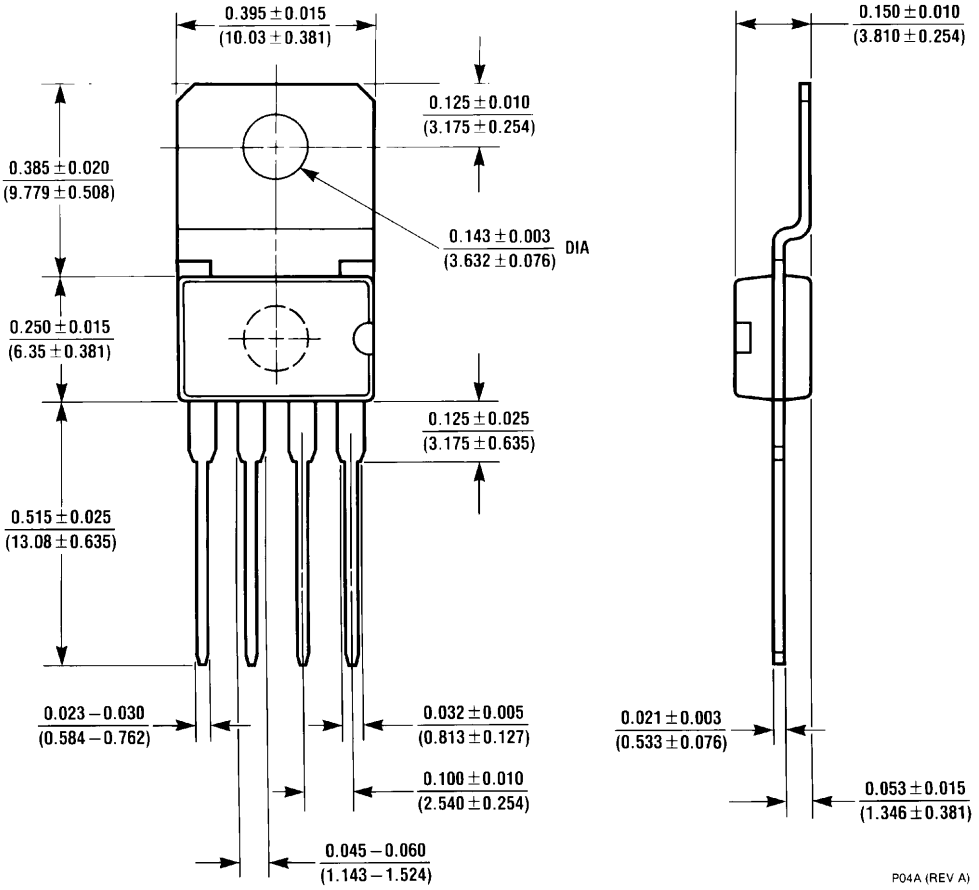

11 Lead Molded TO-202
NS Package Number P11A

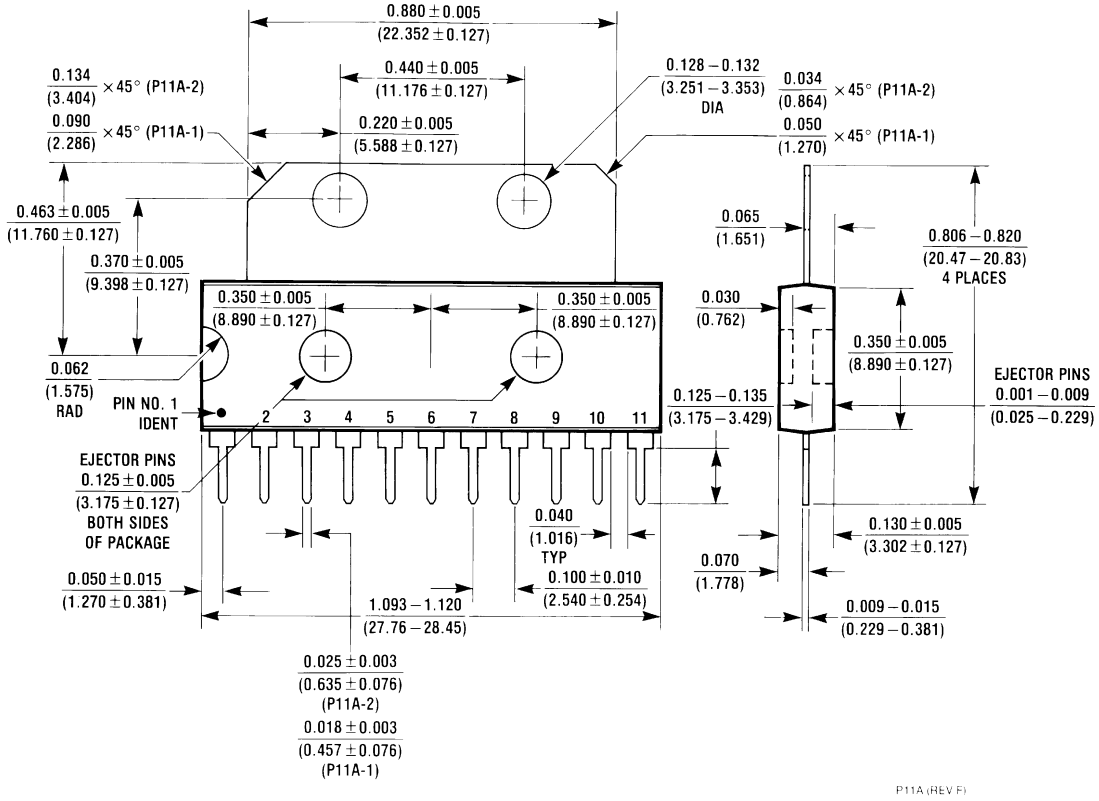

LIFE SUPPORT POLICY

NATIONAL'S PRODUCTS ARE NOT AUTHORIZED FOR USE AS CRITICAL COMPONENTS IN LIFE SUPPORT DEVICES OR SYSTEMS WITHOUT THE EXPRESS WRITTEN APPROVAL OF THE PRESIDENT AND GENERAL COUNSEL OF NATIONAL SEMICONDUCTOR CORPORATION. As used herein:

1. Life support devices or systems are devices or systems which, (a) are intended for surgical implant into the body, or (b) support or sustain life, and whose failure to perform when properly used in accordance with instructions for use provided in the labeling, can be reasonably expected to result in a significant injury to the user.
2. A critical component is any component of a life support device or system whose failure to perform can be reasonably expected to cause the failure of the life support device or system, or to affect its safety or effectiveness.

National Semiconductor Corporation
Americas
Tel: 1-800-272-9959
Fax: 1-800-737-7018
Email: support@nsc.com

www.national.com

National Semiconductor Europe
Fax: +49 (0) 1 80-530 85 86
Email: europe.support@nsc.com
Deutsch Tel: +49 (0) 1 80-530 85 85
English Tel: +49 (0) 1 80-532 78 32
Français Tel: +49 (0) 1 80-532 93 58
Italiano Tel: +49 (0) 1 80-534 16 80

National Semiconductor Asia Pacific Customer Response Group
Tel: 65-2544466
Fax: 65-2504466
Email: sea.support@nsc.com

National Semiconductor Japan Ltd.
Tel: 81-3-5639-7560
Fax: 81-3-5639-7507

National does not assume any responsibility for use of any circuitry described, no circuit patent licenses are implied and National reserves the right at any time without notice to change said circuitry and specifications.