3 Lead Molded TO-202
NS Package Number P03D

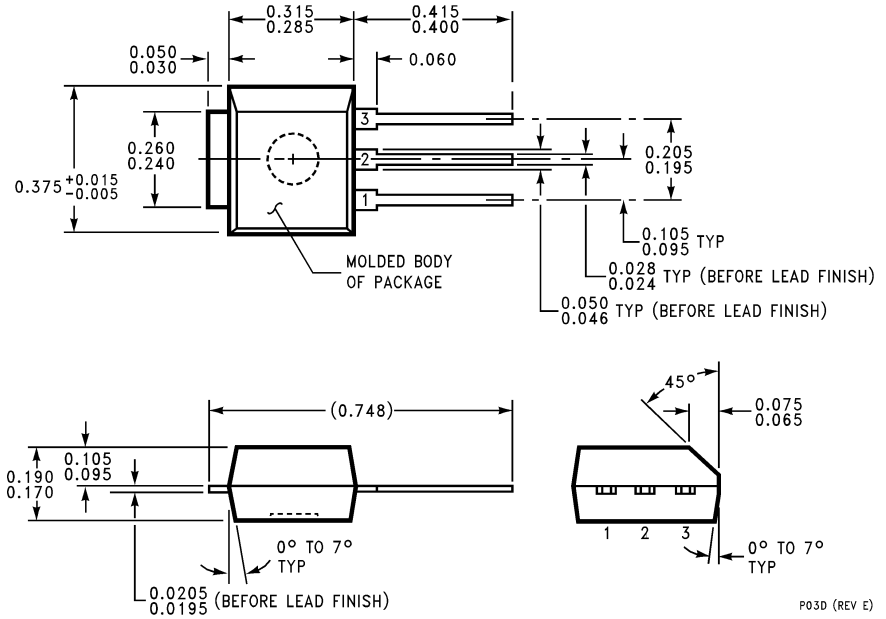
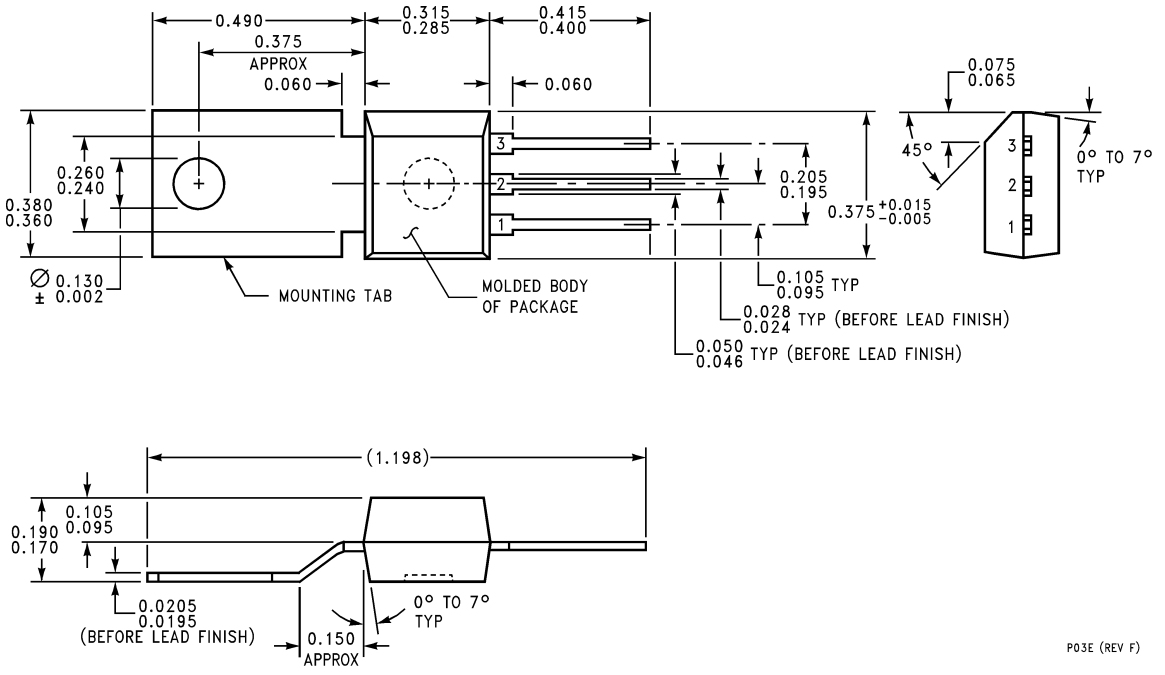
3 Lead Molded TO-202
NS Package Number P03E