HVM DIP (High voltage)

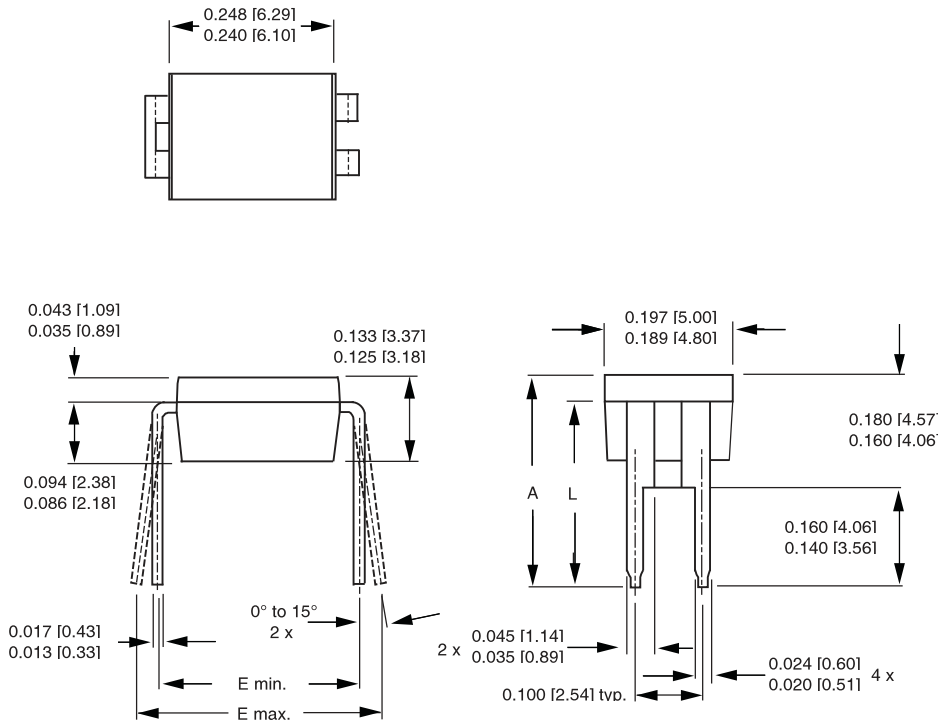

	INCHES		MILLIMETERS	
DIM.	MIN.	MAX.	MIN.	MAX.
A	0.310	0.330	7.87	8.38
E	0.300	0.425	7.62	10.79
L	0.270	0.290	6.86	7.36
ECN: X10-0386-Rev. B, 06-Sep-10 DWG: 5974				

Note

1. Package length does not include mold flash, protrusions or gate burrs. Package width does not include interlead flash or protrusions.