Ceramic single-ended flat package; heatsink mounted; 1 mounting hole; 11 in-line gold-metallized leads **SOT451A**

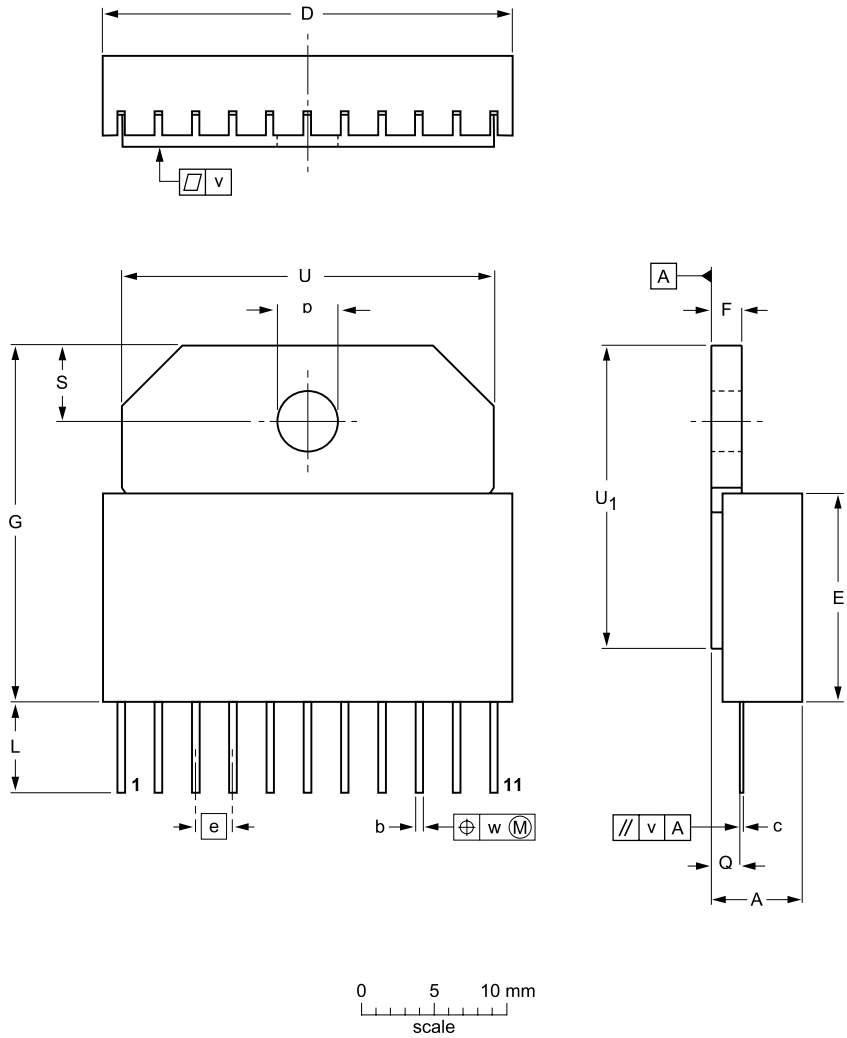

DIMENSIONS (mm are the original dimensions)

UNIT	A	b	c	D	E	e	F	G	L	p	Q	S	U	U_1	v	w	v
mm	5.9 5.5	0.56 0.46	0.25	28.3 27.9	13.9 13.5	2.54	2.2 1.8	23.8 23.4	6.2 5.8	4.2 3.8	2.0 1.6	5.2 4.8	25.4 25.0	20.4 20.0	0.3	0.25	0.1

OUTLINE VERSION	REFERENCES				EUROPEAN PROJECTION	ISSUE DATE
	IEC	JEDEC	EIAJ			
SOT451A						97-06-26