Plastic single-ended through-hole package; heatsink mounted; 1 mounting hole; 3-lead TO-247 **SOT429**

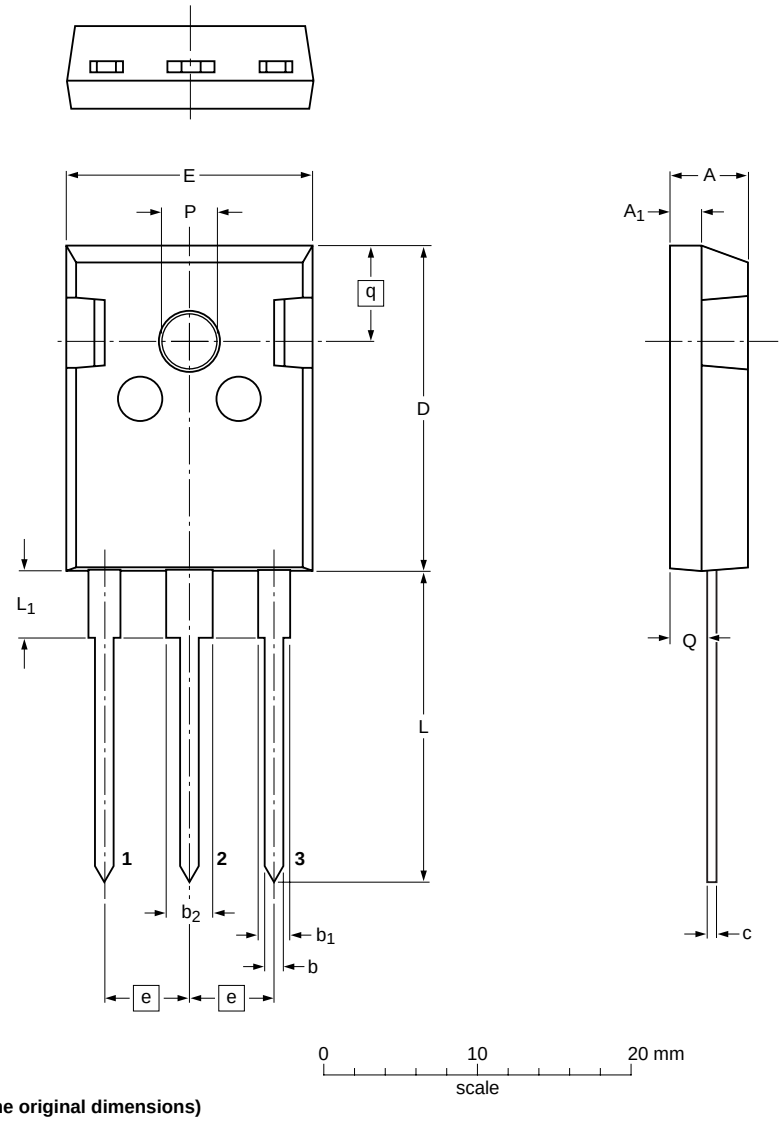

DIMENSIONS (mm are the original dimensions)

UNIT	A	A_1	b	b_1	b_2	c	D	E	e	L	L_1 max	P	Q	q
mm	5.20 4.70	2.10 1.90	1.30 1.00	2.15 1.80	3.10 2.87	0.80 0.50	21.4 20.8	16.20 15.75	5.45 BSC(1)	20.30 19.80	4.50	3.70 3.50	2.5 2.3	6.15 BSC(1)

Note

1. Basic spacing between centers.

OUTLINE VERSION	REFERENCES				EUROPEAN PROJECTION	ISSUE DATE
	IEC	JEDEC	JEITA			
SOT429		TO-247				~~00-02-17~~ 04-09-14

© Koninklijke Philips Electronics N.V. 2004. All rights reserved.