Package Outline

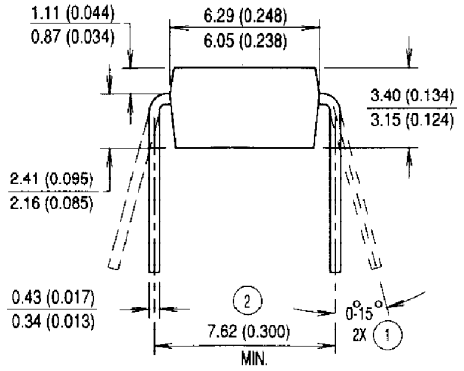

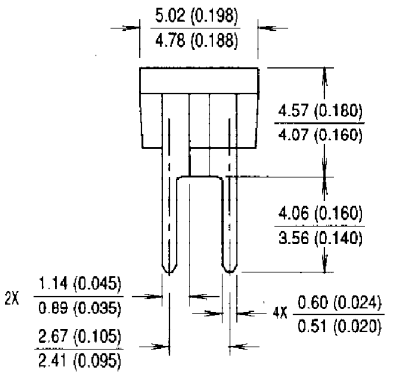

International
IOR Rectifier

WORLD HEADQUARTERS: 233 Kansas St., El Segundo, California 90245, Tel: (310) 322 3331
EUROPEAN HEADQUARTERS: Hurst Green, Oxted, Surrey RH8 9BB, UK Tel: (44) 0883 713215
IR CANADA: 7321 Victoria Park Ave., Suite 201, Markham, Ontario L3R 3L1, Tel: (905) 475 1897 **IR GERMANY:** Saalburgstrasse 157, 61350 Bad Homburg Tel: 6172 37066 **IR ITALY:** Via Liguria 49, 10071 Borgaro, Torino Tel: (39) 1145 10111 **IR FAR EAST:** K&H Bldg., 2F, 3-30-4 Nishi-Ikeburo 3-Chome, Toshima-Ki, Tokyo 171 Tel: (03)3983 0641
IR SOUTHEAST ASIA: 315 Outram Road, #10-02 Tan Boon Liat Building, 0316 Tel: 65 221 8371

Data and specifications subject to change without notice.