Plastic single-ended through-hole package; mountable to heatsink; 1 mounting hole; 3 in-line leads (one lead cropped) **SOD117**

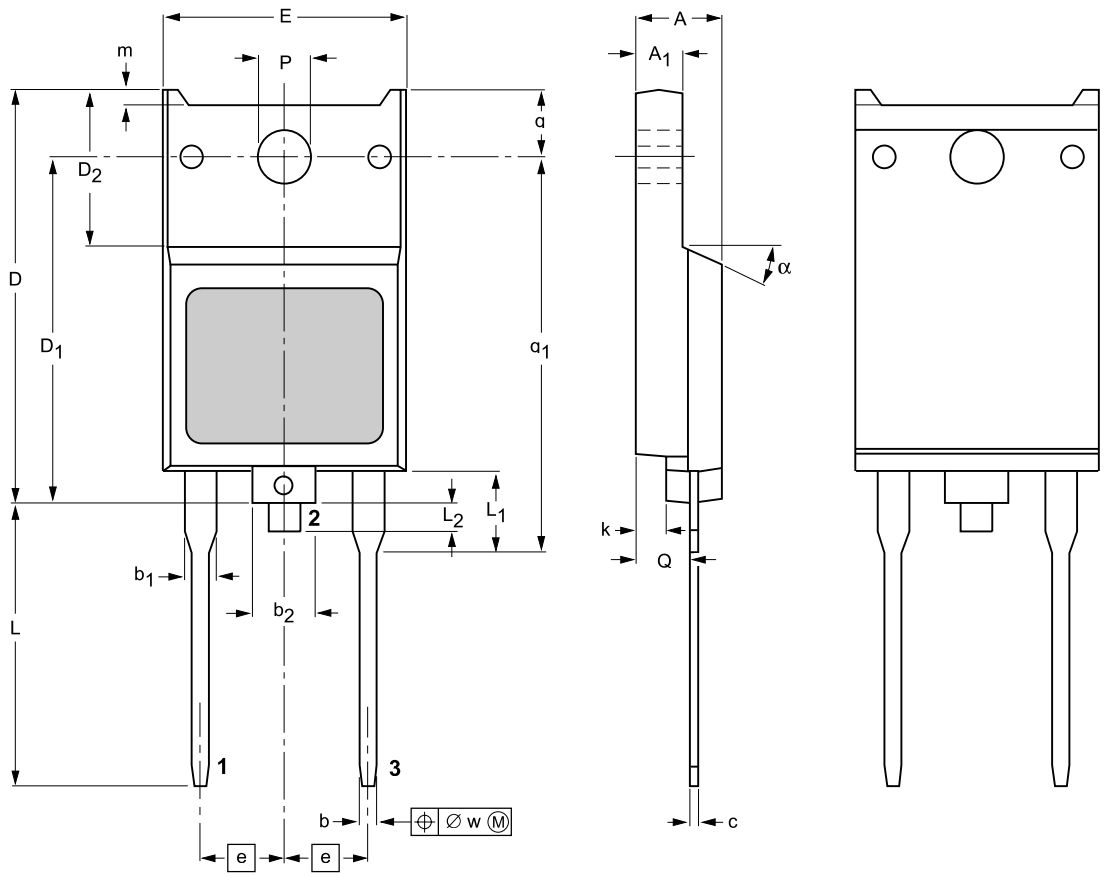

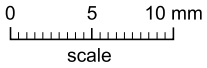

DIMENSIONS (mm are the original dimensions)

UNIT	A	A_1	b	b_1	b_2	c	D	D_1	D_2	E	e	k	L	L_1 (1)	L_2	m	P	Q	α	a_1	w	α
mm	5.8 4.8	3.3 2.7	1.2 0.9	2.2 1.8	4.7 4.2	0.9 0.6	27 26	22.5 21.5	10.2 9.9	16 15	5.45	2.2 1.8	19.1 18.1	5.4 4.8	3.0 1.0	0.8 0.6	3.4 3.1	3.4 3.2	4.7 4.3	25.7 25.1	0.4	27° 23°

Note

1. Tinning of terminals are uncontrolled within zone L_1.

OUTLINE VERSION	REFERENCES				EUROPEAN PROJECTION	ISSUE DATE
	IEC	JEDEC	EIAJ			
SOD117						98-11-06