Case Outline and Dimensions — Super-247
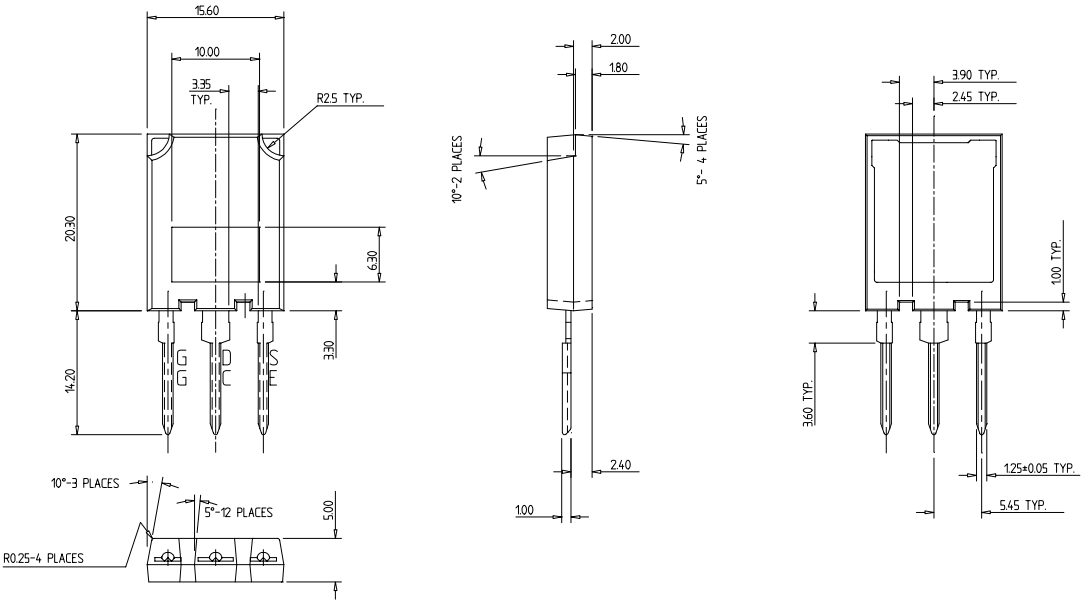
Dimensions are shown in millimeters