TO-218AC

3 LEAD JEDEC TO-218AC PLASTIC PACKAGE

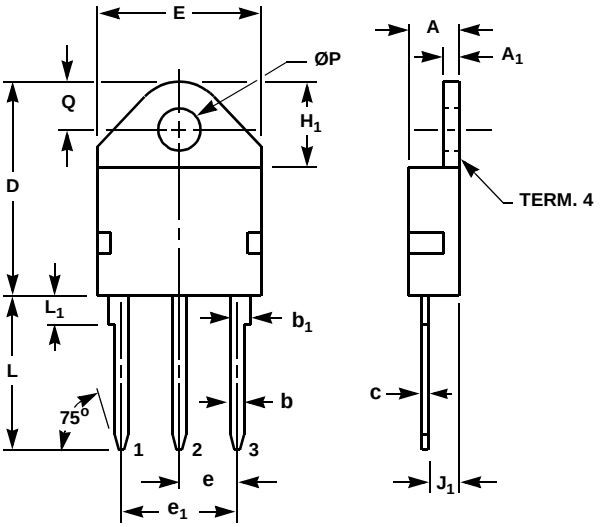

SYMBOL	INCHES		MILLIMETERS		NOTES
	MIN	MAX	MIN	MAX	
A	0.18	0.195	4.70	4.95	-
A_1	0.05	0.062	1.48	1.57	-
b	0.04	0.053	1.25	1.34	3, 4, 5
b_1	0.07	0.080	1.78	2.03	3, 4
c	0.01	0.022	0.46	0.55	3, 4, 5
D	0.80	0.820	20.3	20.8	-
E	0.61	0.625	15.6	15.8	2
e	0.219 TYP		5.56 TYP		7
e_1	0.438 BSC		11.12 BSC		7
H_1	-	0.330	-	8.38	-
J_1	0.11	0.125	2.93	3.17	8
L	0.57	0.600	14.6	15.2	-
L_1	-	0.130	-	3.30	3
ØP	0.15	0.163	4.04	4.14	-
Q	0.17	0.186	4.48	4.72	2

NOTES:

1. These dimensions are within allowable dimensions of Rev. E of JEDEC TO-218AC outline dated 6-86.
2. Tab outline optional within boundaries of dimensions E and Q.
3. Lead dimension and finish uncontrolled in L_1.
4. Lead dimension (without solder).
5. Add typically 0.002 inches (0.05mm) for solder coating.
6. Maximum radius of 0.050 inches (1.27mm) on all body edges and corners.
7. Position of lead to be measured 0.250 inches (6.35mm) from bottom of dimension D.
8. Position of lead to be measured 0.100 inches (2.54mm) from bottom of dimension D.
9. Controlling dimension: Inch.
10 .Revision 1 dated 1-93.

©2001 Fairchild Semiconductor Corporation