Plastic single-ended package; heatsink mounted; 1 mounting hole; 3-lead TO-220AB **SOT78**

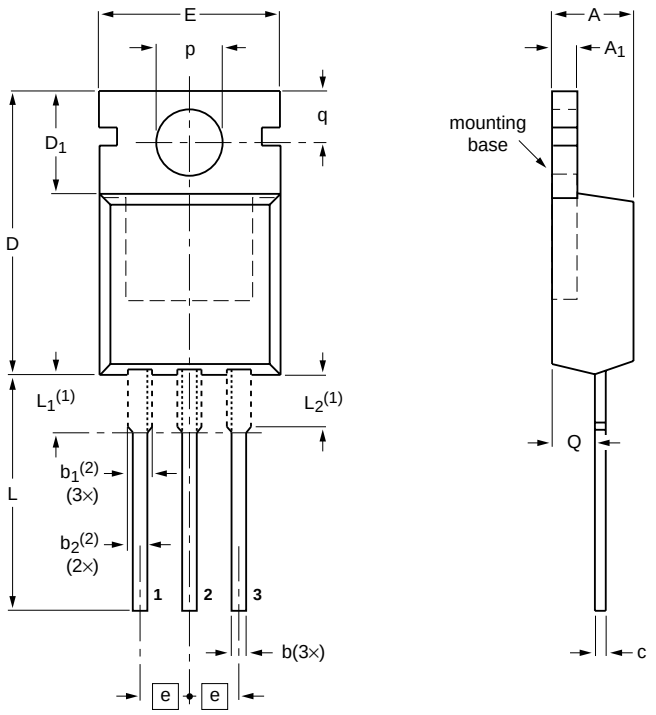

0 5 10 mm
scale

DIMENSIONS (mm are the original dimensions)

UNIT	A	A_1	b	b_1(2)	b_2(2)	c	D	D_1	E	e	L	L_1(1)	L_2(1) max.	p	q	Q
mm	4.7 4.1	1.40 1.25	0.9 0.6	1.6 1.0	1.3 1.0	0.7 0.4	16.0 15.2	6.6 5.9	10.3 9.7	2.54	15.0 12.8	3.30 2.79	3.0	3.8 3.5	3.0 2.7	2.6 2.2

Notes
1. Lead shoulder designs may vary.
2. Dimension includes excess dambar.

OUTLINE VERSION	REFERENCES				EUROPEAN PROJECTION	ISSUE DATE
	IEC	JEDEC	JEITA			
SOT78		3-lead TO-220AB	SC-46			~~08-04-23~~ 08-06-13

© NXP B.V. 2008 . All rights reserved.