Ceramic single-ended flat package; heatsink mounted; 2 mounting holes; 12 in-line tin (Sn) plated leads **SOT347B**

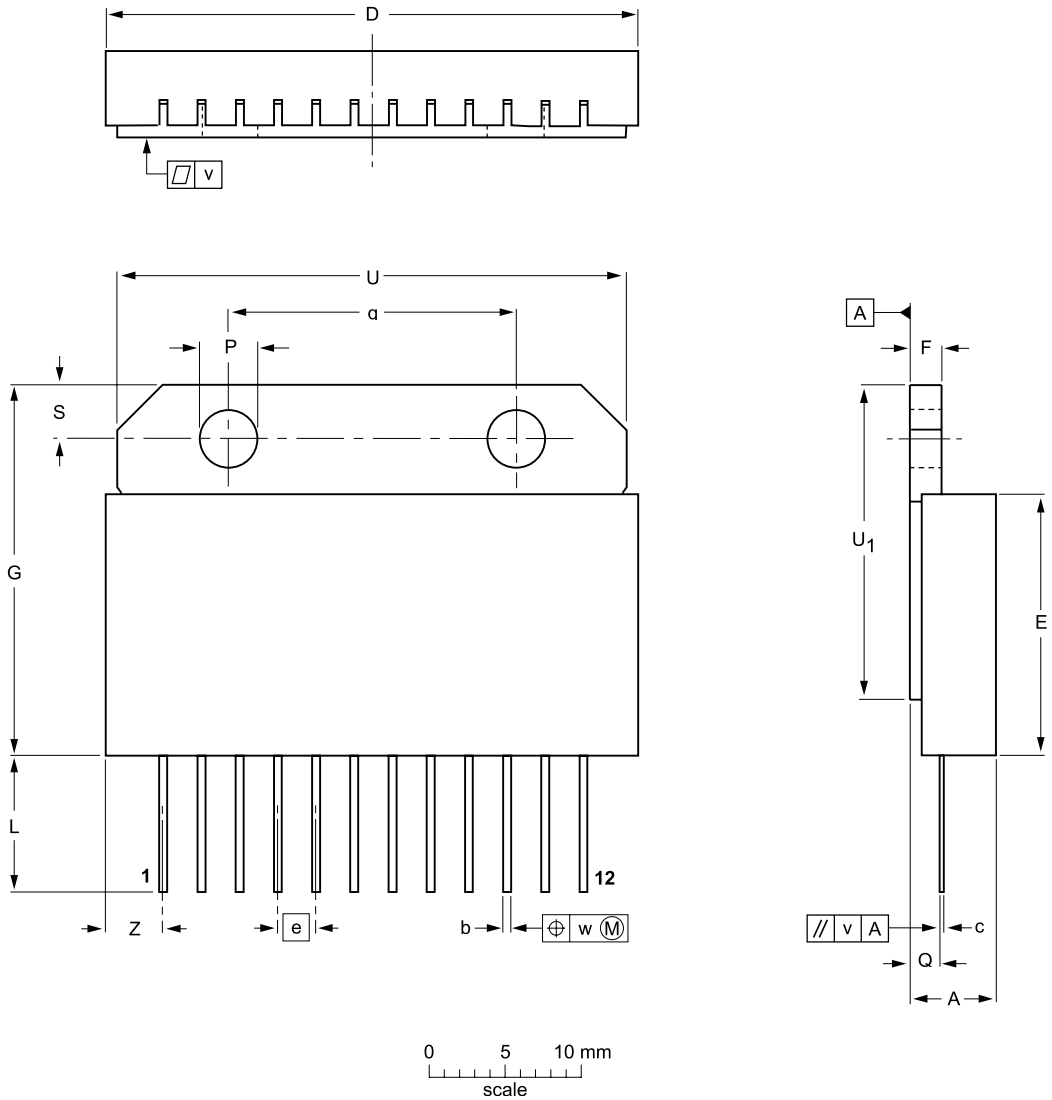

DIMENSIONS (mm are the original dimensions)

UNIT	A	b	c	D	E	e	F	G	L min.	P	Q	a	S	U	U_1	v	w	v	Z max.
mm	6.0 5.6	0.51 0.38	0.25	36.2 35.8	18.2 17.8	2.54	2.0	25.5 24.5	9	4.15 3.85	1.8	19	3.5 3.4	34.4 34.0	22.2 21.8	0.3	0.25	0.1	4.1

OUTLINE VERSION	REFERENCES				EUROPEAN PROJECTION	ISSUE DATE
	IEC	JEDEC	EIAJ			
SOT347B						99-01-05