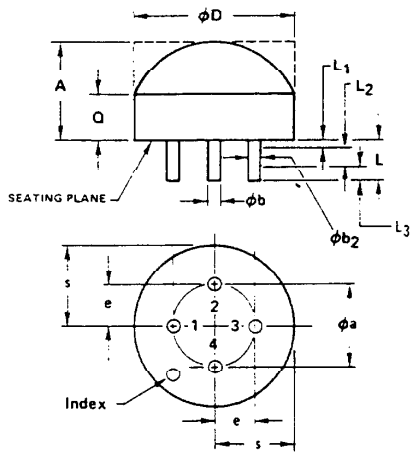

NOTES:

1. REFER TO APPLICABLE SYMBOL LIST.
2. DIMENSIONING & TOLERANCING PER ANSI Y14.5-1973.
3. $Øb_2$ APPLIES TO ZONE L_2. Øb APPLIES TO ZONE L_3. LEAD DIAMETER IS UNCONTROLLED IN ZONE L_1 AND BEYOND L MINIMUM.
4. e AND Øa APPLY TO ZONE (L_1 AND L_2) WHEN UNIT INSTALLED. LEADS TO BE WITHIN .13 RADIUS TRUE POSITION AT GAUGE PLANE AT MAXIMUM MATERIAL CONDITION.
5. MAXIMUM QUANTITY OF LEADS 4.
6. MAXIMUM QUANTITY OF ALLOWABLE MISSING LEADS 1.
7. PACKAGE CONTOUR OPTIONAL WITHIN DIMENSIONS SPECIFIED.
8. VISUAL OR MECHANICAL INDEX OPTIONAL IF ONE LEAD IS OMITTED.
9. CONTROLLING DIMENSION: INCH.

VARIATIONS (ALL DIMENSIONS SHOWN IN MILLIMETERS)

SYMBOL	AA MIN.	AA MAX.	NOTE	AB MIN.	AB MAX.	NOTE	MIN.	MAX.	NOTE	MIN.	MAX.	NOTE
A	3.1	6.0	7	3.1	6.0	7						
Øa	2.42	2.66	4	4.83	5.33	4						
Øb	.407	.533		.407	.533							
$Øb_2$	.407	.482	3	.407	.482	3						
ØD	4.88	5.63	7	7.75	8.25	7						
e	1.15	1.39	4	2.29	2.79	4						
L	12.70	--	3	12.70	--	3						
L_1	--	1.27	3	--	1.27	3						
L_2	5.10	--	3	5.10	--	3						
L_3	6.35	--	3	6.35	--	3						
Q	1.53	--		1.53	--							
s	2.29	2.92		3.69	4.19							
NOTE	1,2,5,6,8,9			1,2,5,6,8,9								
REF.	TO-106			TO-105								
ISSUE	B SEPT 76			B SEPT 76								

JEDEC SOLID STATE PRODUCT OUTLINES	TITLE HEADER FAMILY	ISSUE B	DATE 9/7/76	TO-230 VARIATION AA THRU AB

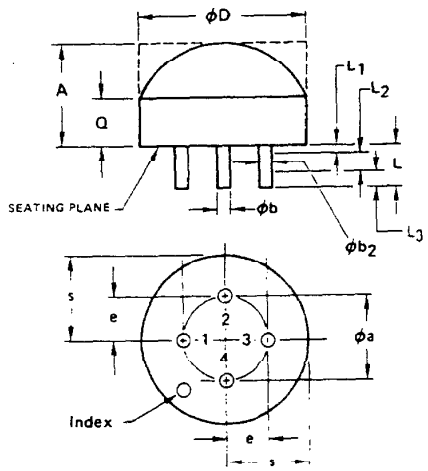

NOTES:

1. REFER TO APPLICABLE SYMBOL LIST.
2. DIMENSIONING & TOLERANCING PER ANSI Y14.5-1973.
3. $Øb_2$ APPLIES TO ZONE L_2. Øb APPLIES TO ZONE L_3. LEAD DIAMETER IS UNCONTROLLED IN ZONE L_1 AND BEYOND L MINIMUM.
4. e AND Øa APPLY TO ZONE (L_1 AND L_2) WHEN UNIT INSTALLED. LEADS TO BE WITHIN .005 RADIUS TRUE POSITION AT GAUGE PLANE AT MAXIMUM MATERIAL CONDITION.
5. MAXIMUM QUANTITY OF LEADS 4.
6. MAXIMUM QUANTITY OF ALLOWABLE MISSING LEADS 1.
7. PACKAGE CONTOUR OPTIONAL WITHIN DIMENSIONS SPECIFIED.
8. VISUAL OR MECHANICAL INDEX OPTIONAL IF ONE LEAD IS OMITTED.
9. CONTROLLING DIMENSION: INCH.

VARIATIONS (ALL DIMENSIONS SHOWN IN INCHES)

SYMBOL	AA MIN.	AA MAX.	NOTE	AB MIN.	AB MAX.	NOTE	MIN.	MAX.	NOTE	MIN.	MAX.	NOTE
A	.120	.240	7	.120	.240	7						
Øa	.095	.105	4	.190	.210	4						
Øb	.016	.021		.016	.021							
$Øb_2$	.016	.019	3	.016	.019	3						
ØD	.192	.222	7	.305	.325	7						
e	.045	.055	4	.090	.110	4						
L	.500	--	3	.500	--	3						
L_1	--	.050	3	--	.050	3						
L_2	.200	--	3	.200	--	3						
L_3	.250	--	3	.250	--	3						
Q	.060	--		.060	--							
s	.090	.115		.145	.165							
NOTE	1,2,5,6,8,9			1,2,5,6,8,9								
REF.	TO-106			TO-105								
ISSUE	B SEPT 76			B SEPT 76								

JEDEC SOLID STATE PRODUCT OUTLINES	TITLE	ISSUE	DATE	TO-230
	HEADER FAMILY	B	9/7/76	VARIATION AA THRU AB