Plastic single-ended package; heatsink mounted; 1 mounting hole; 3-lead TO-247 Jumbo **SOT430**

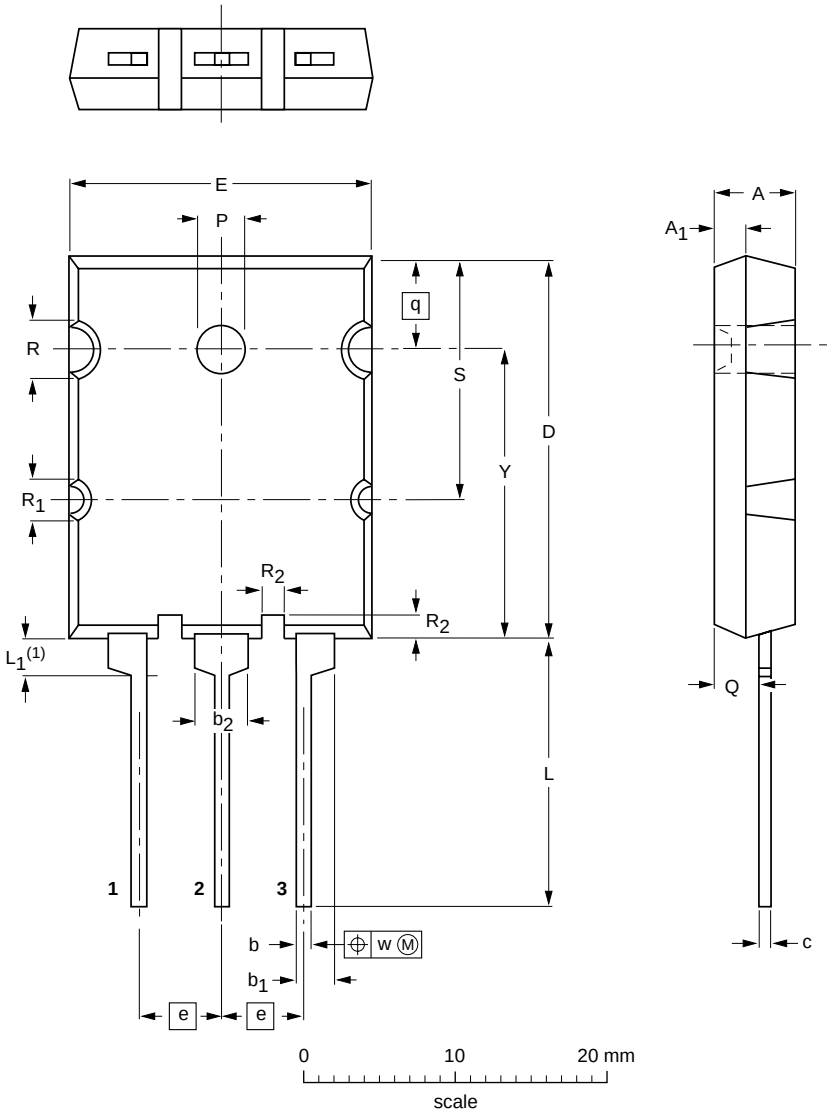

DIMENSIONS (mm are the original dimensions)

UNIT	A max.	A_1	b	b_1 max.	b_2 max.	c max.	D	E max.	e	L min.	L_1	P	Q max.	q	R	R_1	R_2	S	w	Y
mm	5.3	2.3	1.0 0.8	2.5	3.5	0.8	26.5 25.5	20.5	5.45	19.5	2.5	3.5 3.1	3.0	6.0	4.0	3.0	1.5	16	0.4	20.5 19.5

Note

1. Terminals are uncontrolled within zone L_1.

OUTLINE VERSION	REFERENCES				EUROPEAN PROJECTION	ISSUE DATE
	IEC	JEDEC	EIAJ			
SOT430		TO-247 Jumbo				~~97-06-23~~ 99-09-13