Plastic single-ended multi-chip package;
magnetized ferrite magnet (3.8 x 2 x 0.8 mm); 4 interconnections; 2 in-line leads **SOT453A**

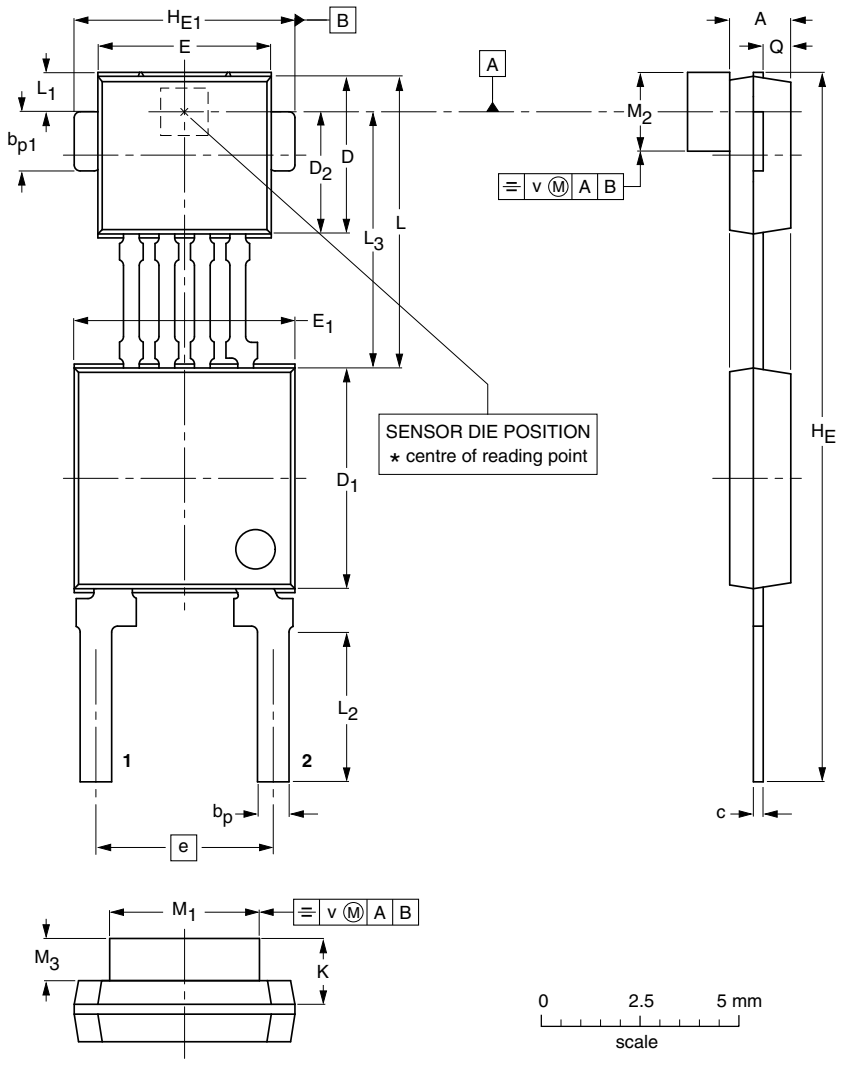

DIMENSIONS (mm are the original dimensions)

UNIT	A(1)	bp	bp1	c	D(2)	D1(2)	D2(2)	E(2)	E1(2)	e	HE	HE1	K max.	L	L1	L2	L3	M1	M2	M3(1)	Q	v
mm	1.7 1.4	0.8 0.7	1.57 1.47	0.3 0.24	4.1 3.9	5.7 5.5	3.15 2.95	4.5 4.3	5.7 5.5	4.6 4.4	18.2 17.8	5.6 5.5	1.67	7.55 7.25	1.2 0.9	3.9 3.5	6.55 6.35	3.9 3.7	2.1 1.9	0.9 0.7	0.75 0.65	0.25

Notes

1. Glue thickness not included.
2. Plastic or metal protrusions of 0.15 mm maximum per side are not included.

OUTLINE VERSION	REFERENCES				EUROPEAN PROJECTION	ISSUE DATE
	IEC	JEDEC	EIAJ			
SOT453A						~~99-09-22~~ 00-08-31

© 2008 NXP B.V.
All rights reserved. Reproduction in whole or in part is prohibited without prior consent of the copyright owner. The information presented in this document does not form part of any quotation or contract, is believed to be accurate and reliable and may be changed without notice. No liability will be accepted by the publisher for any consequence of it's use. Publication thereof does not convey or imply any license under patent- or other industrial or intellectual property rights.

Printed in the Netherlands