Plastic single-ended package (I2PAK); low-profile 3-lead TO-220AB **SOT226**

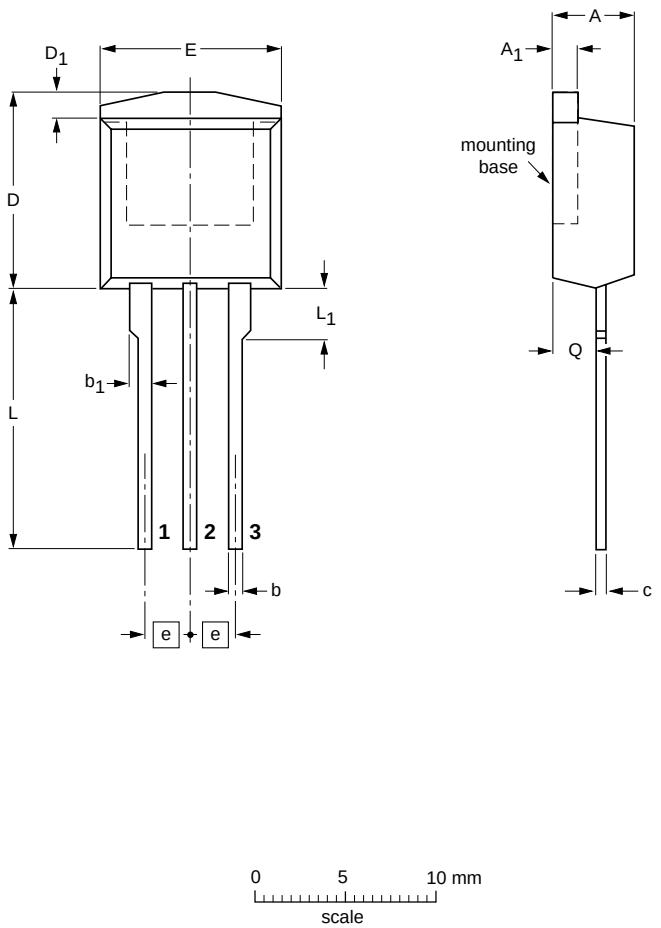

DIMENSIONS (mm are the original dimensions)

UNIT	A	A_1	b	b_1	c	D max	D_1	E	e	L	L_1	Q
mm	4.5 4.1	1.40 1.27	0.85 0.60	1.3 1.0	0.7 0.4	11	1.6 1.2	10.3 9.7	2.54	15.0 13.5	3.30 2.79	2.6 2.2

OUTLINE VERSION	REFERENCES				EUROPEAN PROJECTION	ISSUE DATE
	IEC	JEDEC	JEITA			
SOT226		low-profile 3-lead TO-220AB				~~05-06-23~~ 06-02-14

© Koninklijke Philips Electronics N.V. 2006. All rights reserved.