Figure 21. Max247 drawing

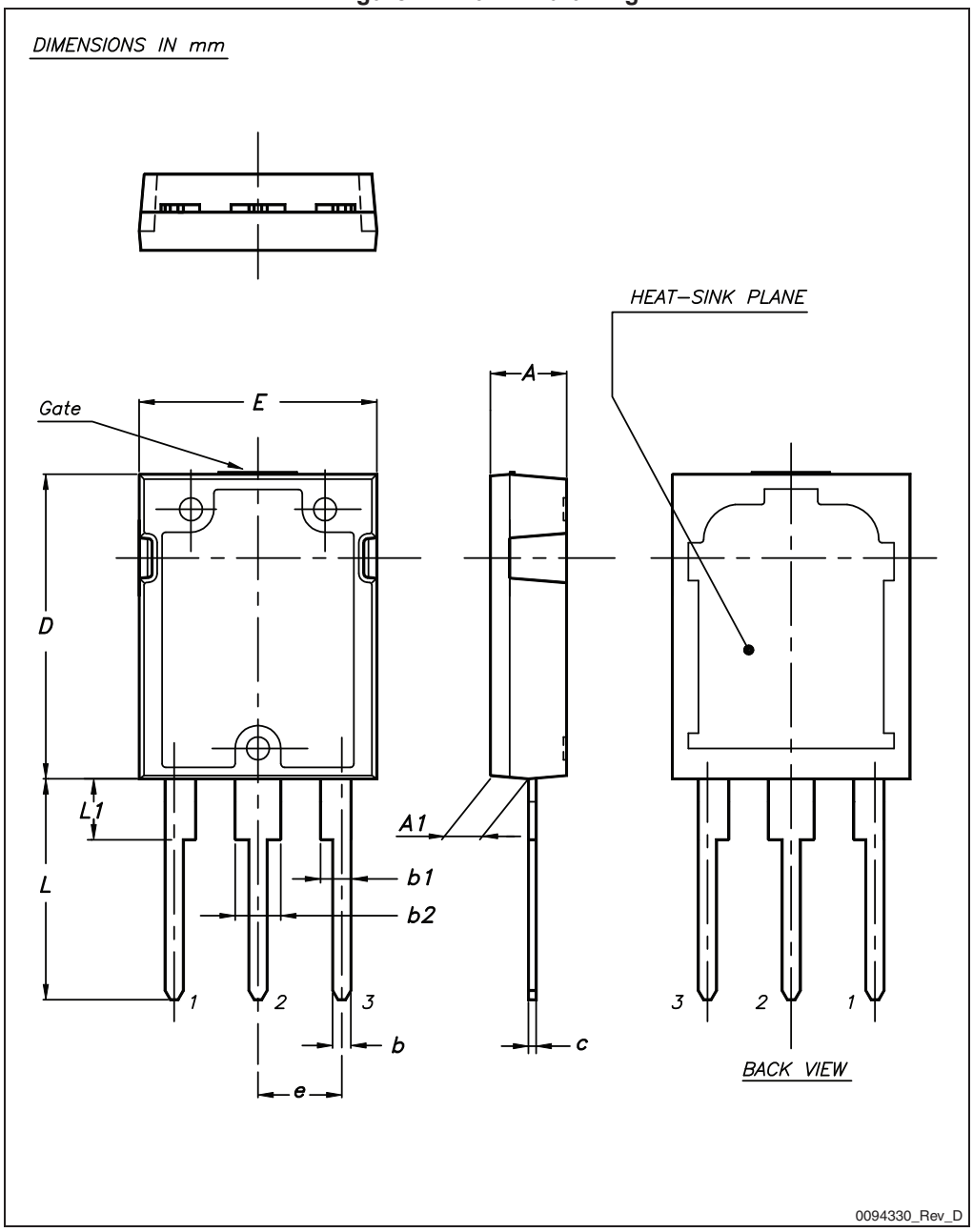

Table 8. Max247 mechanical data

Dim.	mm		
	Min.	Typ.	Max.
A	4.70		5.30
A1	2.20		2.60
b	1.00		1.40
b1	2.00		2.40
b2	3.00		3.40
c	0.40		0.80
D	19.70		20.30
e	5.35		5.55
E	15.30		15.90
L	14.20		15.20
L1	3.70		4.30