May 1999

National Semiconductor

# Transistor Outline (TO-237)

## 3 Lead Molded TO-237
## NS Package Number R03A

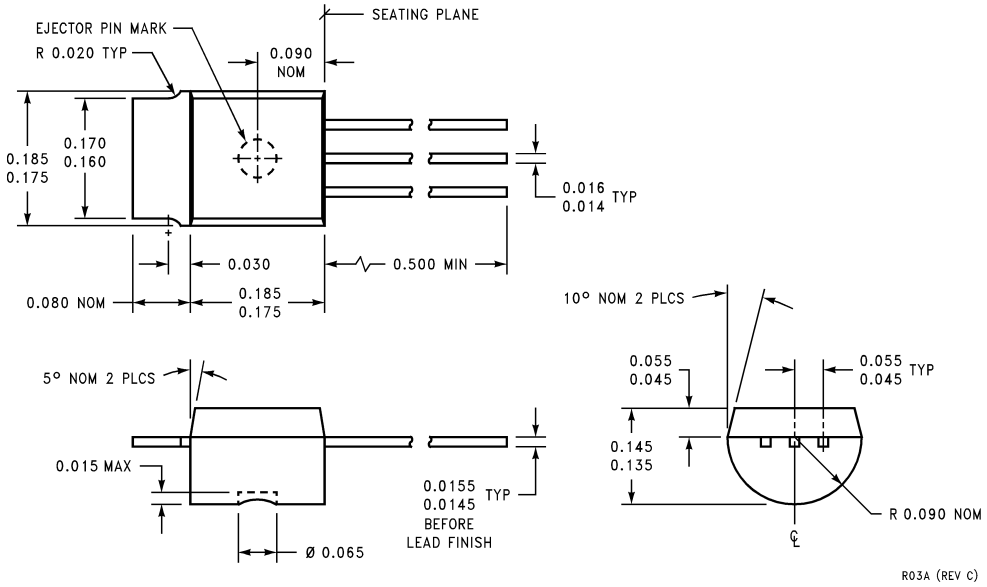


© 1999 National Semiconductor Corporation 

## 3 Lead Molded TO-237
## NS Package Number R03B

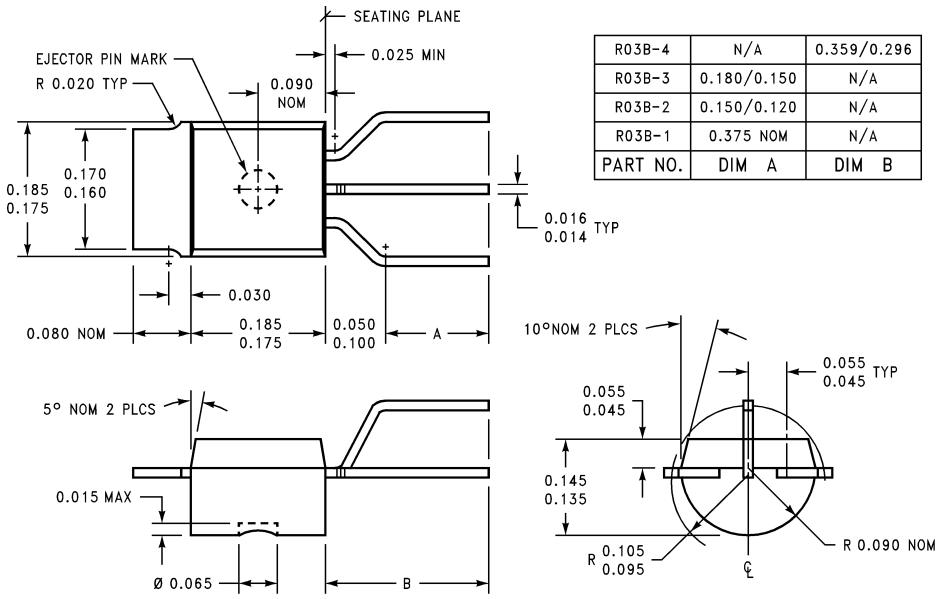


| | | |
|---|---|---|
| R03B-4 | N/A | 0.359/0.296 |
| R03B-3 | 0.180/0.150 | N/A |
| R03B-2 | 0.150/0.120 | N/A |
| R03B-1 | 0.375 NOM | N/A |
| PART NO. | DIM A | DIM B |

R03B (REV B)

## 3 Lead Molded TO-237
## NS Package Number R03C

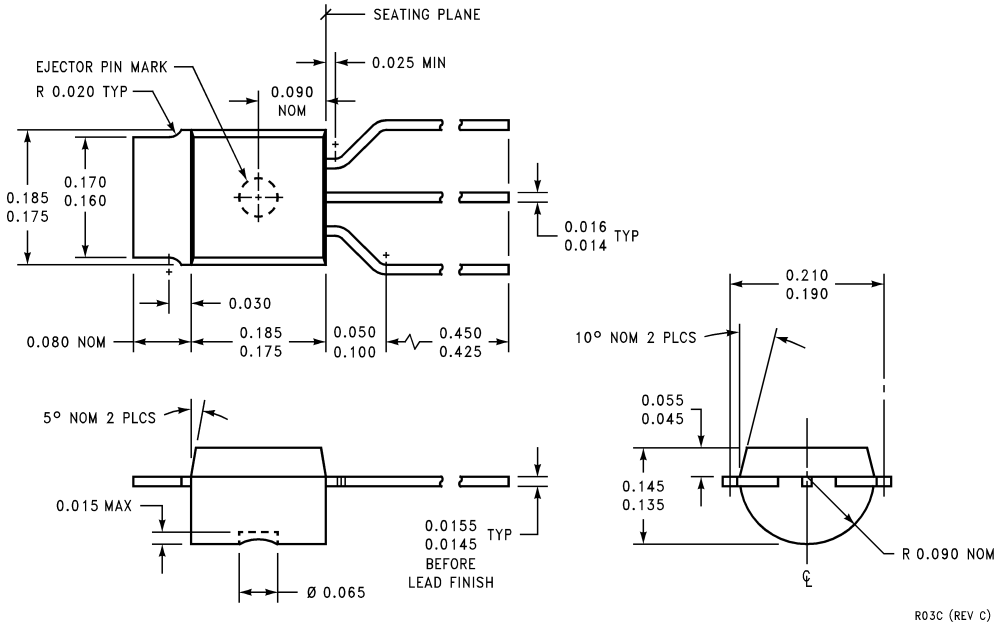


R03C (REV C)

## 3 Lead Molded TO-237
## NS Package Number R03D

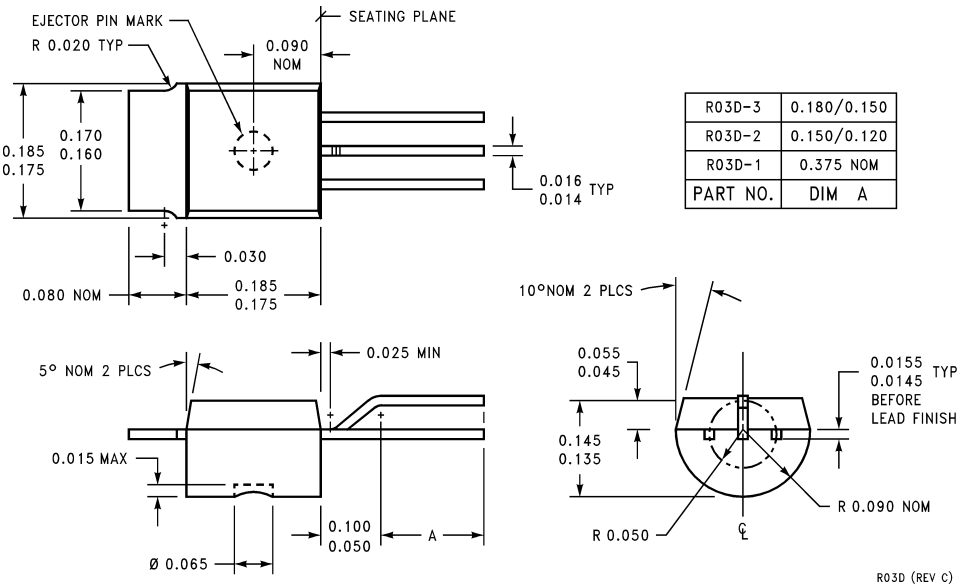


| | |
|---|---|
| R03D-3 | 0.180/0.150 |
| R03D-2 | 0.150/0.120 |
| R03D-1 | 0.375 NOM |
| PART NO. | DIM A |

**LIFE SUPPORT POLICY**

NATIONAL'S PRODUCTS ARE NOT AUTHORIZED FOR USE AS CRITICAL COMPONENTS IN LIFE SUPPORT DEVICES OR SYSTEMS WITHOUT THE EXPRESS WRITTEN APPROVAL OF THE PRESIDENT AND GENERAL COUNSEL OF NATIONAL SEMICONDUCTOR CORPORATION. As used herein:

1. Life support devices or systems are devices or systems which, (a) are intended for surgical implant into the body, or (b) support or sustain life, and whose failure to perform when properly used in accordance with instructions for use provided in the labeling, can be reasonably expected to result in a significant injury to the user.
2. A critical component is any component of a life support device or system whose failure to perform can be reasonably expected to cause the failure of the life support device or system, or to affect its safety or effectiveness.

**National Semiconductor Corporation**
Americas
Tel: 1-800-272-9959
Fax: 1-800-737-7018
Email: support@nsc.com

www.national.com

**National Semiconductor Europe**
Fax: +49 (0) 1 80-530 85 86
Email: europe.support@nsc.com
Deutsch Tel: +49 (0) 1 80-530 85 85
English Tel: +49 (0) 1 80-532 78 32
Français Tel: +49 (0) 1 80-532 93 58
Italiano Tel: +49 (0) 1 80-534 16 80

**National Semiconductor Asia Pacific Customer Response Group**
Tel: 65-2544466
Fax: 65-2504466
Email: sea.support@nsc.com

**National Semiconductor Japan Ltd.**
Tel: 81-3-5639-7560
Fax: 81-3-5639-7507

National does not assume any responsibility for use of any circuitry described, no circuit patent licenses are implied and National reserves the right at any time without notice to change said circuitry and specifications.