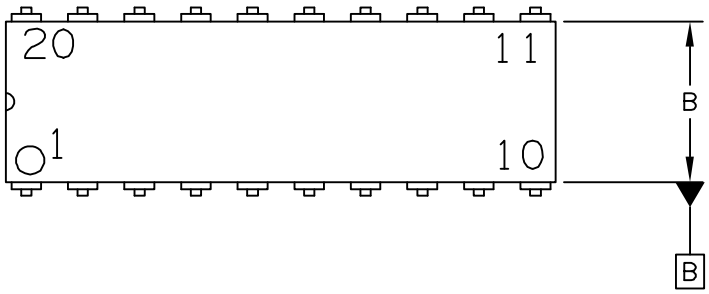

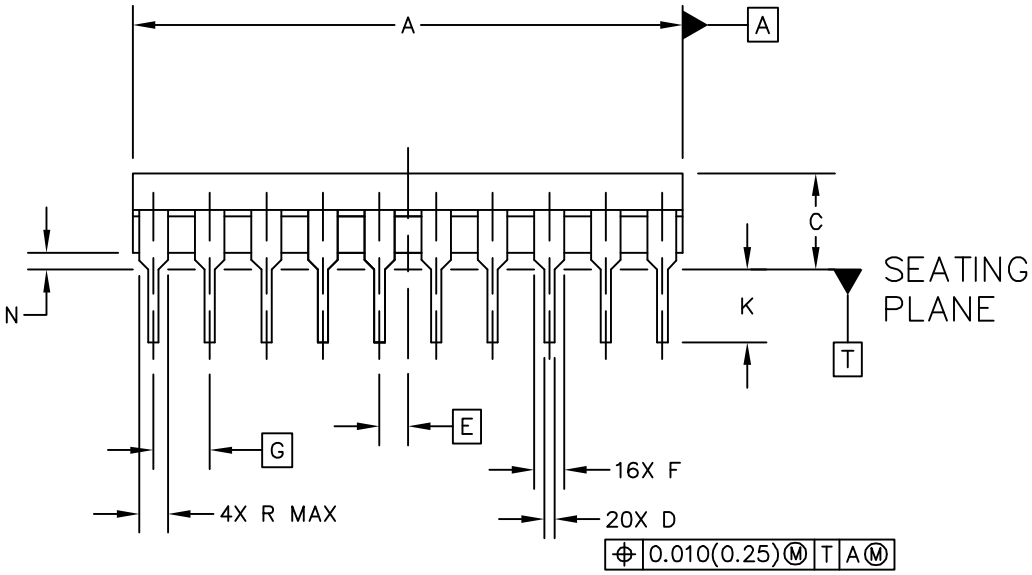

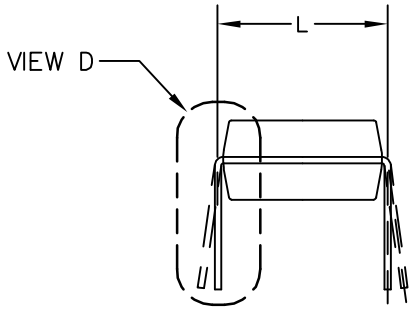

© NXP SEMICONDUCTORS N.V. ALL RIGHTS RESERVED	MECHANICAL OUTLINE	PRINT VERSION NOT TO SCALE
TITLE: 20LD .300 PDIP	DOCUMENT NO: 98ASB42899B	REV: D
	STANDARD: NON-JEDEC	
	SOT146-4	01 APR 2016

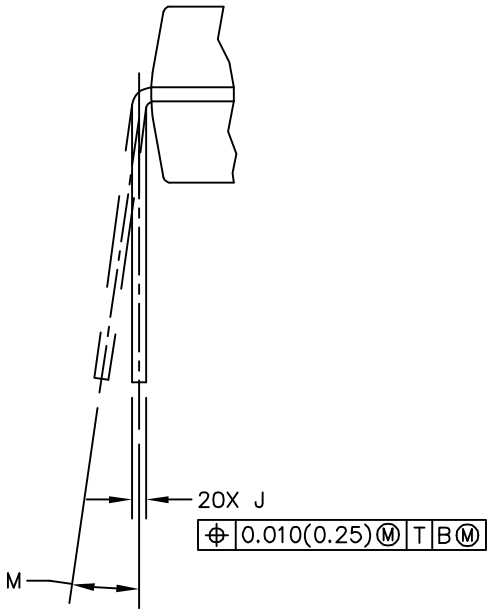

VIEW D

© NXP SEMICONDUCTORS N.V.
ALL RIGHTS RESERVED

	MECHANICAL OUTLINE	PRINT VERSION NOT TO SCALE
TITLE: 20LD .300 PDIP	DOCUMENT NO: 98ASB42899B	REV: D
	STANDARD: NON-JEDEC	
	SOT146-4	01 APR 2016

NOTES:

1. DIMENSIONING AND TOLERANCING PER ASME Y14.5M 1994.
2. CONTROLLING DIMENSION: INCH.
3. DIMENSION L TO CENTER OF LEAD WHEN FORMED PARALLEL.
4. DIMENSION B DOES NOT INCLUDE MOLD FLASH.

DIM	MILLIMETERS MIN	MAX	DIM	INCHES MIN	MAX	DIM	MILLIMETERS MIN	MAX	DIM	INCHES MIN	MAX
A	24.39	24.99		0.960	0.984						
B	6.96	7.49		0.274	0.295						
C	3.56	5.08		0.140	0.200						
D	0.38	0.56		0.015	0.022						
E	1.27 BSC			0.050 BSC							
F	1.14	1.52		0.045	0.060						
G	2.54 BSC			0.100 BSC							
J	0.20	0.38		0.008	0.015						
K	2.79	3.76		0.110	0.148						
L	7.62 BSC			0.300 BSC							
M	0°	15°		0°	15°						
N	0.50	1.01		0.020	0.040						
R	.....	1.29		.....	0.051						

© NXP SEMICONDUCTORS N.V.
ALL RIGHTS RESERVED

MECHANICAL OUTLINE

PRINT VERSION NOT TO SCALE

TITLE:

20LD .300 PDIP

DOCUMENT NO: 98ASB42899B REV: D

STANDARD: NON-JEDEC

SOT146-4 01 APR 2016