Plastic single-ended package; heatsink mounted; 1 mounting hole; 3 lead TO-247 'full pack' **SOT199**

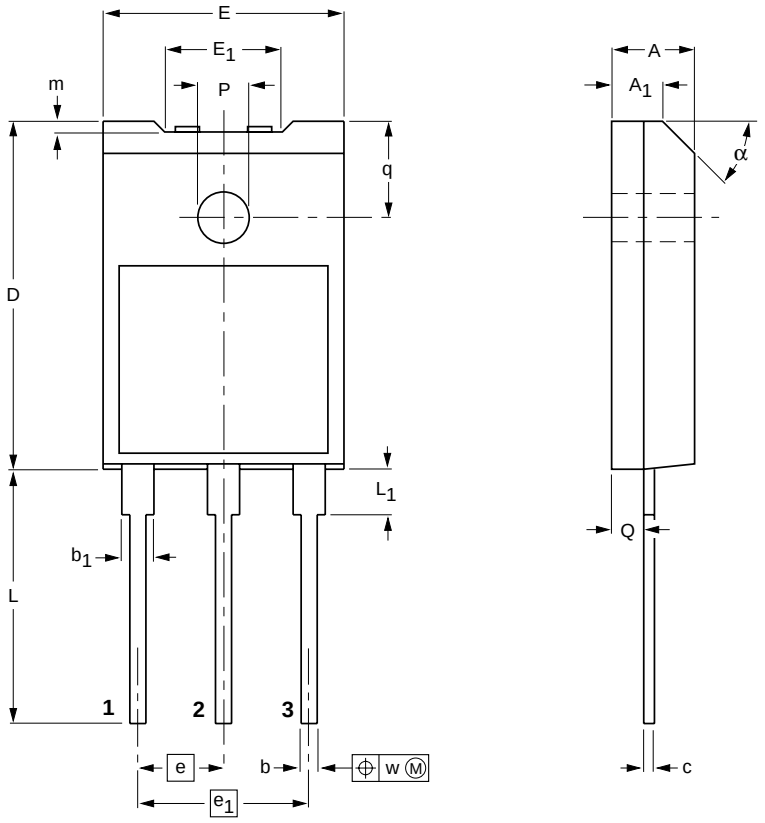

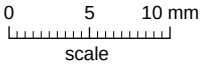

DIMENSIONS (mm are the original dimensions)

UNIT	A	A_1	b	b_1	c	D	E	E_1	e	e_1	L	L_1 (1)	m	P	Q	q	w	α
mm	5.2 4.8	3.4 3.0	1.2 1.0	2.1 1.9	0.6 0.5	21.5 20.5	15.3 14.7	7.8 6.8	5.45	10.9	16.5 15.7	3.7 3.3	0.8 0.6	3.3 3.1	2.1 1.9	6.2 5.8	0.4	45°

Note

1. Terminals in this zone are not tinned.

OUTLINE VERSION	REFERENCES				EUROPEAN PROJECTION	ISSUE DATE
	IEC	JEDEC	EIAJ			
SOT199		3-lead TO-247F				~~97-06-27~~ 99-09-13