Plastic single-ended package; heatsink mounted; 1 mounting hole; 3-lead TO-220AB **SOT78A**

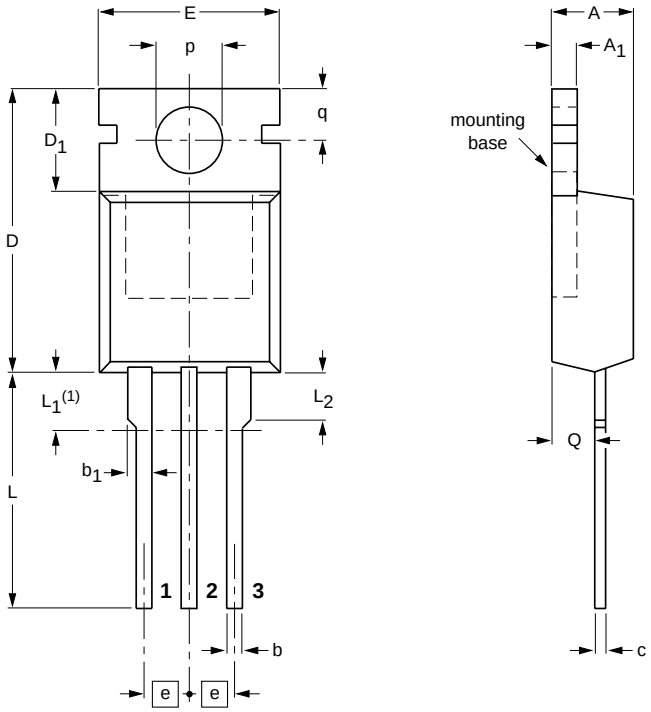

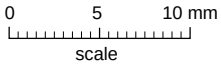

DIMENSIONS (mm are the original dimensions)

UNIT	A	A_1	b	b_1	c	D	D_1	E	e	L	L_1(1)	L_2 max.	p	q	Q
mm	4.5 4.1	1.39 1.27	0.9 0.6	1.3 1.0	0.7 0.4	15.8 15.2	6.4 5.9	10.3 9.7	2.54	15.0 13.5	3.30 2.79	3.0	3.8 3.6	3.0 2.7	2.6 2.2

Note

1. Terminals in this zone are not tinned.

OUTLINE VERSION	REFERENCES				EUROPEAN PROJECTION	ISSUE DATE
	IEC	JEDEC	JEITA			
SOT78A		3-lead TO-220AB	SC-46			~~03-01-22~~ 05-03-14

© Koninklijke Philips Electronics N.V. 2005. All rights reserved.