TO-251 Package Dimensions

FAIRCHILD SEMICONDUCTOR™

TO-251 (FS PKG Code 39)

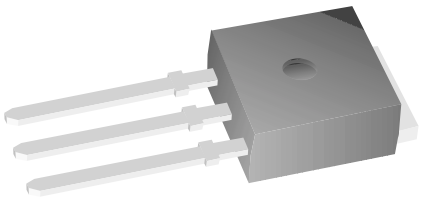

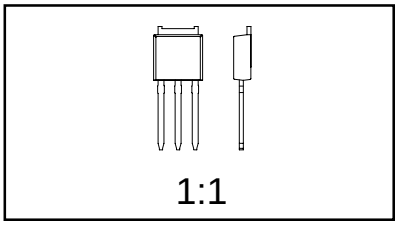

Scale 1:1 on letter size paper

Dimensions shown below are in:
millimeters

Part Weight per unit (gram): 0.44

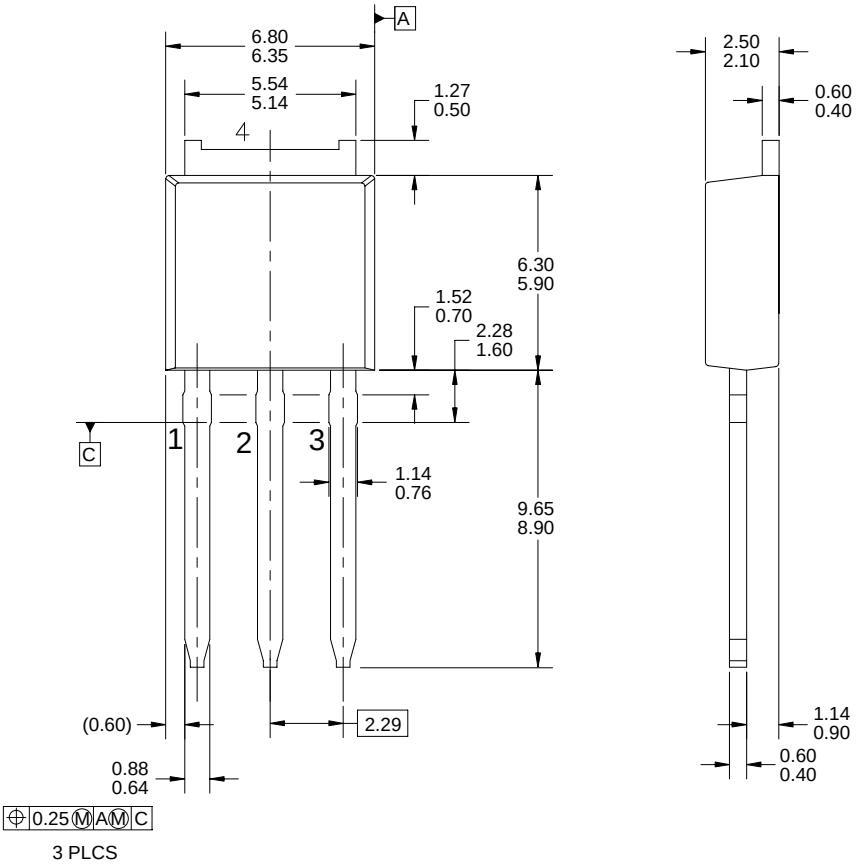

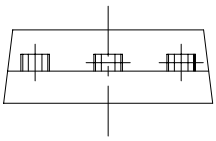

NOTES: UNLESS OTHERWISE SPECIFIED

A) ALL DIMENSIONS ARE IN MILLIMETERS.
B) THIS PACKAGE CONFORMS TO JEDEC, TO-251, ISSUE C, VARIATION AA, DATED SEP. 1988.
C) DIMENSION AND TOLERANCING PER ANSI Y14.5M -1982.

©2001 Fairchild Semiconductor Corporation