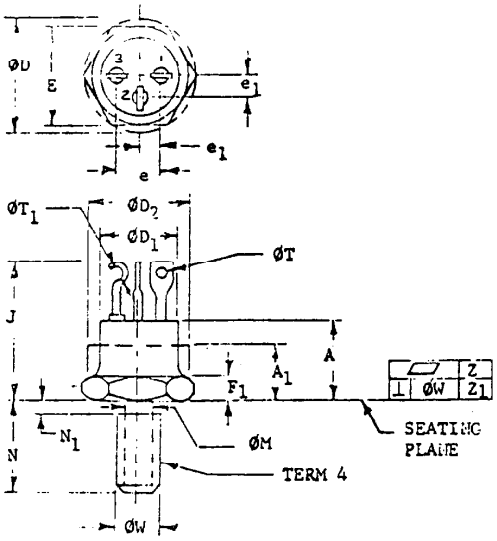

NOTES:

1. Refer to rules for dimensioning semiconductor product outlines included in Publication No. 76.
2. Chamfer or undercut on one or both ends of hexagonal portion is optional.
3. The device contour with the exception of the hexagon is optional within cylinder defined by $ØD_2$ and A_1, $ØD_2$ not to exceed actual E.
4. Terminal 3 can be flattened and pierced or hook type.
5. Angular orientation of terminals with respect to hexagon is optional.
6. ØW is pitch diameter of coated threads. Ref: Screw Thread Standards for Federal Services, Handbook H28, Part I.

VARIATIONS (ALL DIMENSIONS SHOWN IN MILLIMETERS)

SYMBOL	MA MIN.	MA MAX.	NOTE	MB MIN.	MB MAX.	NOTE	MIN.	MAX.	NOTE	MIN.	MAX.	NOTE
A	8.26	11.68		12.20	13.58							
A_1	—	6.85	3	—	7.62	3						
ØD	—	20.16		—	25.65							
$ØD_1$	14.48	15.49		18.93	19.68							
$ØD_2$	15.50	17.44	3	19.69	22.22	3						
E	17.00	17.47		21.52	22.22							
e	8.64	10.54	5	12.32	13.08	5						
e_1	4.32	5.41	5	6.10	6.60	5						
F_1	2.29	3.81	2	2.29	4.24	2						
J	16.26	22.22		23.80	26.16							
ØM	5.59	6.32		7.07	7.92							
N	10.72	11.55		11.69	12.57							
N_1	—	2.28		—	2.66							
ØT	1.20	1.82		1.53	2.66							
$ØT_1$	1.17	1.95	4	1.53	2.66	4						
ØW	1/4-28UNF-2A		6	5/16-24UNF-2A		6						
Z	—	.050		—	.050							
Z_1	—	.152		—	.152							
NOTE	1, 2, 3, 4, 5			1, 2, 3, 4, 5								
REF.	TO-61			TO-63								
ISSUE	A MARCH, 1971			A MARCH, 1971								

JEDEC SEMICONDUCTOR DEVICE OUTLINES	TITLE STUD HEX BASE FAMILY (SOLID LEADS)	ISSUE A	DATE MAR. 1971	TO-211MA-MB