TO-107

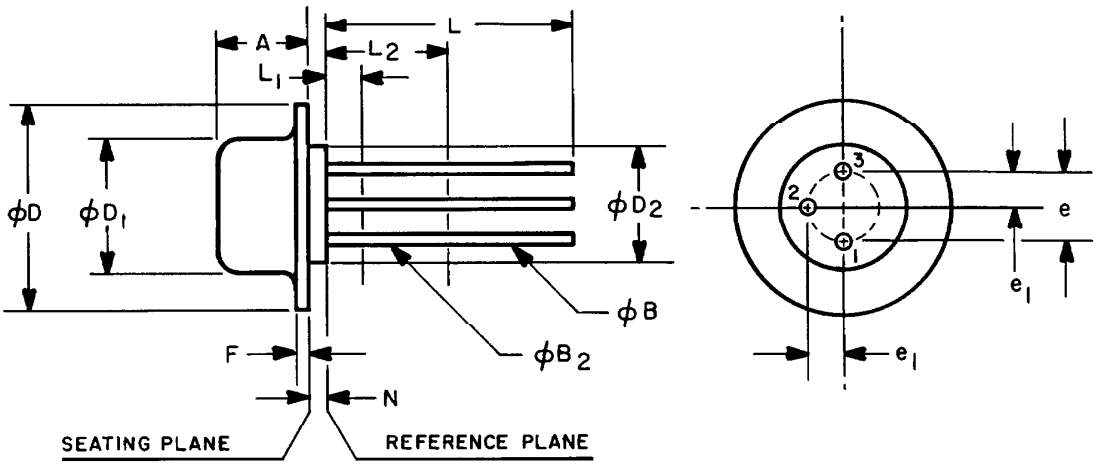

MILLIMETER DIMENSIONS ARE DERIVED FROM BASIC INCH DIMENSIONS

SYMBOL	INCHES MIN.	INCHES MAX.	MILLIMETERS MIN.	MILLIMETERS MAX.	NOTES
A	.105	.135	2.67	3.42	
Ø B	.016	.021	.407	.533	1
Ø B_2	.016	.019	.407	.482	1
Ø D	.320	.350	8.13	8.89	
Ø D_1	.200	.215	5.08	5.46	
Ø D_2	.160	.170	4.07	4.32	
e	.100 T.P.		2.54 T.P.		2
e_1	.050 T.P.		1.27 T.P.		2
F	-	.030	-	.76	
N	.045	.060	1.15	1.52	
L	.500	-	12.70	-	1
L_1	-	.050	-	1.27	1
L_2	.250	-	6.35	-	1

NOTES:

1. Ø B_2 APPLIES BETWEEN L_1 AND L_2. Ø B APPLIES BETWEEN L_2 AND L. DIAMETER IS NOT CONTROLLED IN L_1.

2. LEADS HAVING MAXIMUM DIAMETER .019" (.482 MM) MEASURED IN GAGING PLANE .054" (1.38 MM) + .001" (.025 MM) - .000" (.000 MM) BELOW THE REFERENCE PLANE OF THE DEVICE SHALL BE WITHIN .007" (.177 MM) OF THEIR TRUE POSITIONS.